Building a better future
Global Leader

U-Series
Molded Case Circuit Breaker



LV & MV Circuit Breakers

HYUNDAI
HEAVY INDUSTRIES CO.,LTD.

HYUNDAI U-Series

Molded Case Circuit Breaker

CONTENTS

04 Introduction · 06 Features · 11 Quick Selection Table · 15 Rating Overview · 33 Specifications and Standard Order Codes
135 Characteristic Curves & Dimensions · 187 Accessories · 221 Technical Information · 236 Order Information
246 Handling Instruction | Inspection and Maintenance



for YOU & being NEW

The design concepts of U-Series MCCB pursue advanced technology in size,
customized characteristic in range and powerful capability in specification.
All come out from our sincerity to be close to you.

HYUNDAI U-Series

Molded Case Circuit Breaker

ADVANCED TECHNOLOGY in size **[UAB type]**

CUSTOMIZED CHARACTERISTIC in range **[UCB type]**

POWERFUL CAPABILITY in specification **[UPB type]**

Introduction

| Wide and powerful range |



UAB, UCB Type
[up to 1600AF]

| Compact size

- High breaking capacity in 60mm depth, up to 250AF
- Application of current-limiting technology
- UAB type
  - up to 25kA at AC380/415V in W75 x H130 x D60mm
- UCB type
  - up to 50kA at AC380/415V in W90/105 x H165 x D60mm

| Reliable quality

- Type-tested by KEMA Netherlands

| Wide and powerful range

- 50, 125, 250, 400, 630, 800, 1000, 1250, 1600AF
- Fixed or adjustable thermal trip mechanism up to 800AF
- Double protected electronic trip mechanism for 1600AF

| Various accessories

- Motor operator and operating handles for smooth operation
- Terminal cover and terminal busbar for safety
- DIN rail adapter and mounting base for easy installation
- Switches and trip devices for control by signals

| Modern and customized design |





UPB, HBL Type
[125, 160, 250, 400, 630AF]

| High breaking capacity

- Up to 150kA at AC380/415V
- Based on current-limiting technology
- Ics = 100% Icu

| Reliable quality

- Type-tested by international test authorities
- KEMA for IEC standard, KERI for NEMA standard

| Diverse trip mechanism and application

- Fixed & adjustable thermal, electronic
- Motor protection, nuclear power plant

Miniature Type
[30, 50, 100AF]

| Industrial and residential application

- Mini molded case circuit breaker
- Mini earth leakage circuit breaker
- Up to 100A, 10kA

| Various protection

- Short-circuit and overload
- Earth leakage protection

| Internal accessories

- Auxiliary switch
- Trip alarm switch
- Shunt trip

Features

| Adjustable rating in full range with diverse trip mechanisms |

- U-Series MCCB adopts adjustable rating function in full range from 50 to 1600AF. With diverse trip mechanisms of U-Series MCCB, you will be provided with wide options for system design and more flexible load fluctuations.

[UAB, UCB type]



[UPB type]



| Wide and powerful production range |

- U-Series MCCB supplies you with wide and powerful production range; 3 to 1600A, 5 to 150kA at AC415V from general distribution boards to nuclear power plants.
  U-Series MCCB also completely covers Hi-Series MCCB range with better characteristics.

Thermal magnetic type

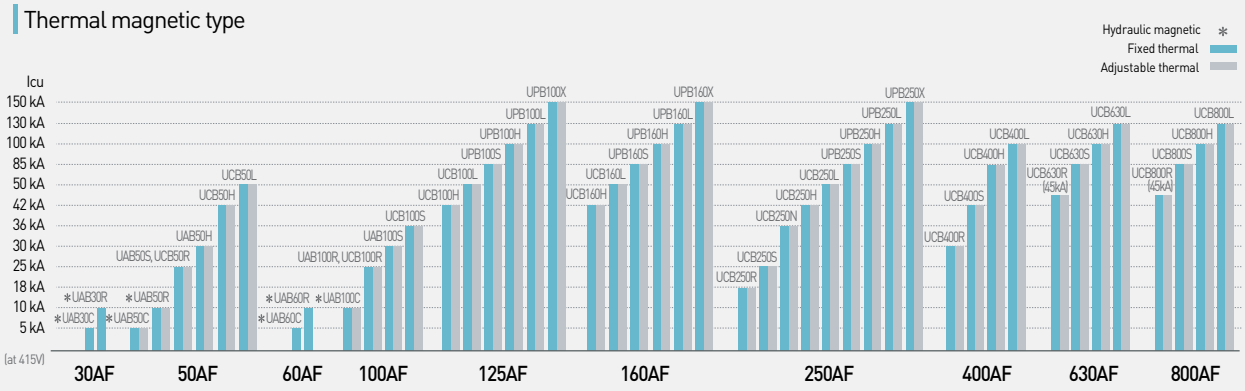

Electronic type

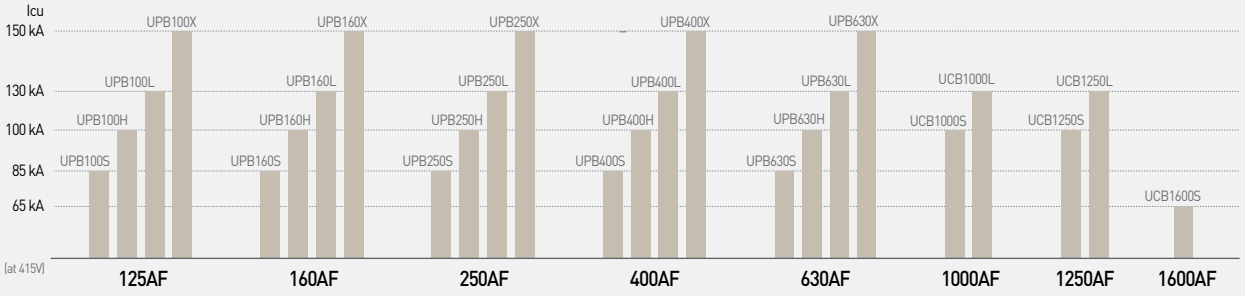

Miniature type

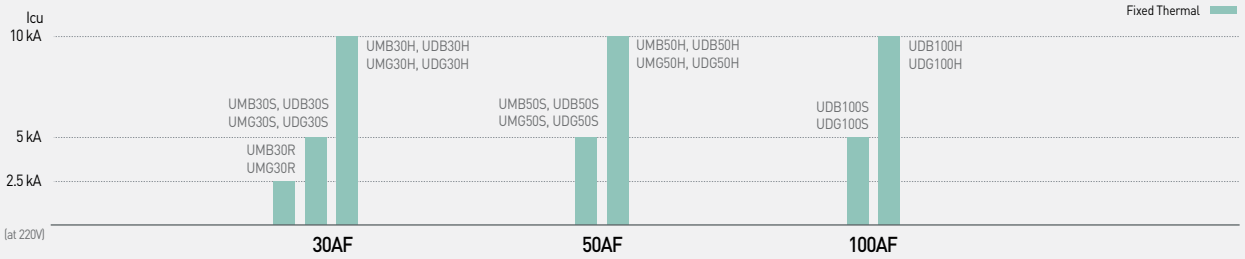

Motor protection - UPB type 125-250AF

Q-class HBL type - 100-225AF

Switch disconnector - UAD type 50-100AF, UCD type 50-1250AF, UPD type 125-630AF

Features

| High breaking capacity, realized by advanced technology and optimized design |

- Our optimized design by advanced current-limiting technology allows U-Series MCCB to realize high breaking capacity in a smaller size compared to Hi-Series MCCB, contributing to compact design of system.

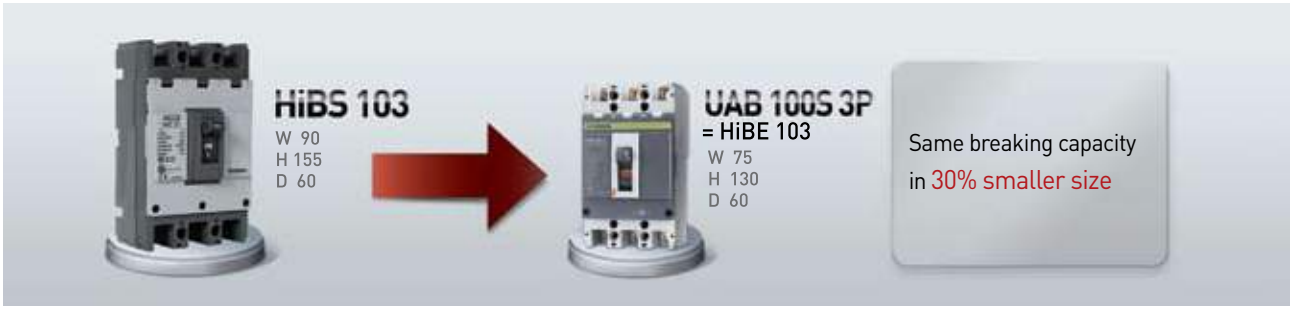



- The current-limiting characteristic of U-Series MCCB also minimizes the effects from fault currents and offers cost-effectiveness.

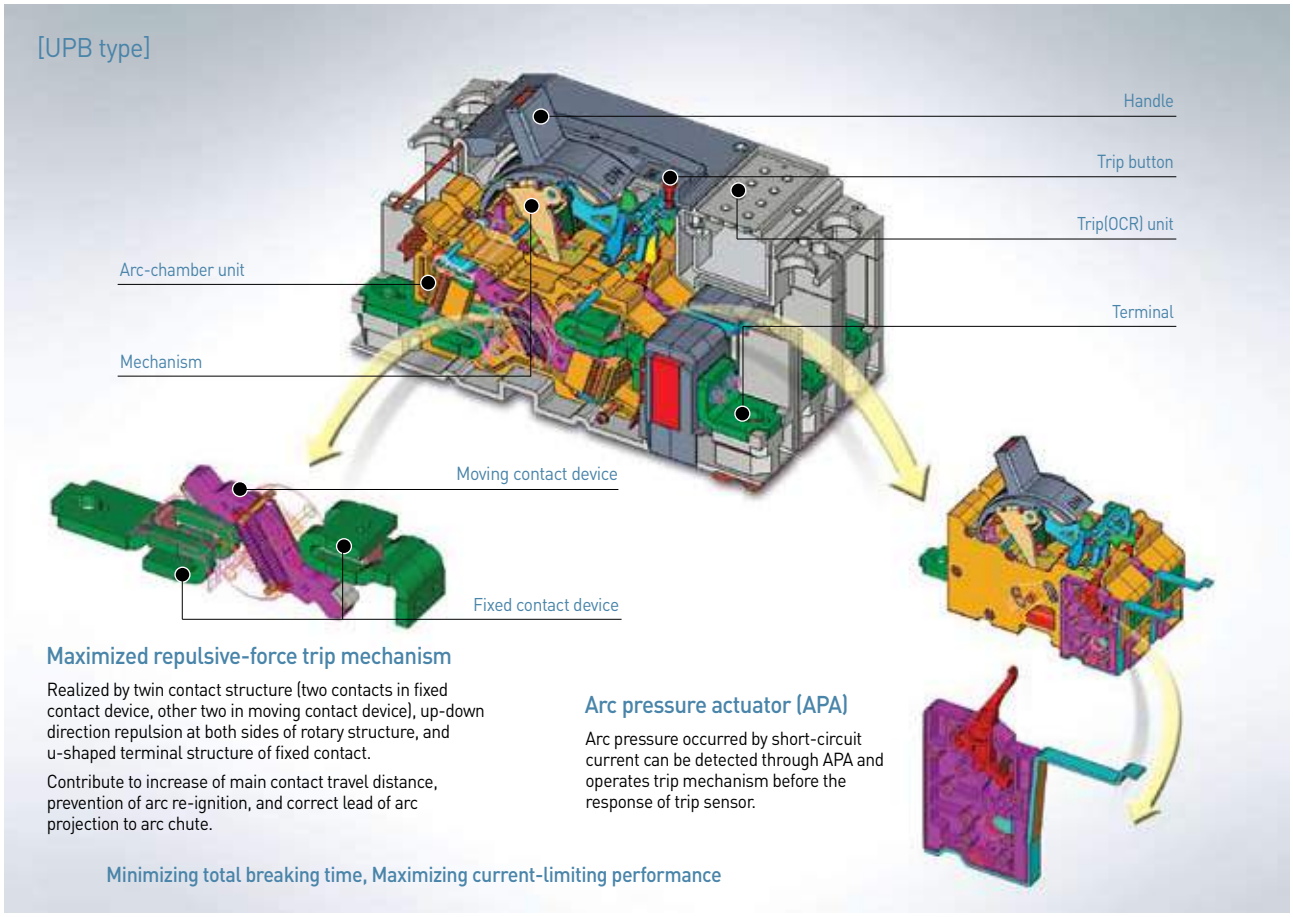

Maximized repulsive-force trip mechanism

Realized by twin contact structure (two contacts in fixed contact device, other two in moving contact device), up-down direction repulsion at both sides of rotary structure, and u-shaped terminal structure of fixed contact.

Contribute to increase of main contact travel distance, prevention of arc re-ignition, and correct lead of arc projection to arc chute.

Arc pressure actuator (APA)

Arc pressure occurred by short-circuit current can be detected through APA and operates trip mechanism before the response of trip sensor.

Minimizing total breaking time, Maximizing current-limiting performance

| Standardization of dimensions |

- U-Series MCCB minimizes the difference in size of each model, so that they can be easily replaced whenever the specifications of the system changes.

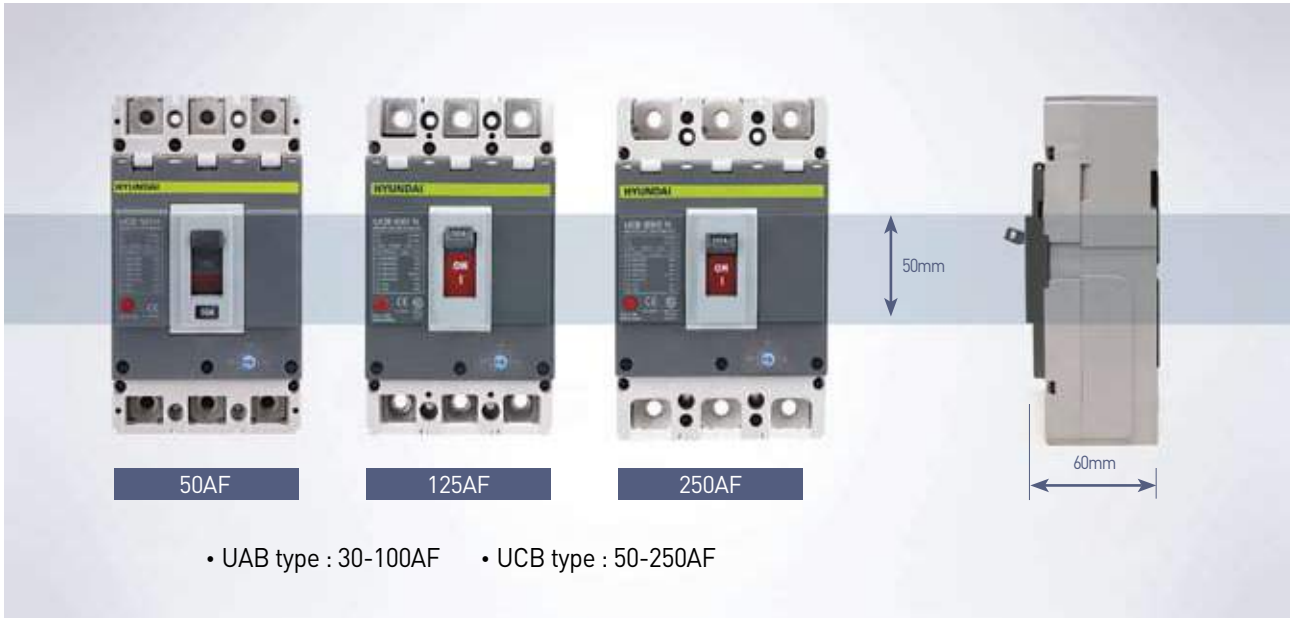

- UAB type : 30-100AF
- UCB type : 50-250AF

| Reliable quality and various applications |

- U-Series MCCB is type-tested by international test authorities such as KEMA and KERI as well satisfying IEC60947-2 and NEMA AB-1 standards. It also acquired various marine classes and certificates for nuclear power plants.



Features

| Modern and refined design |

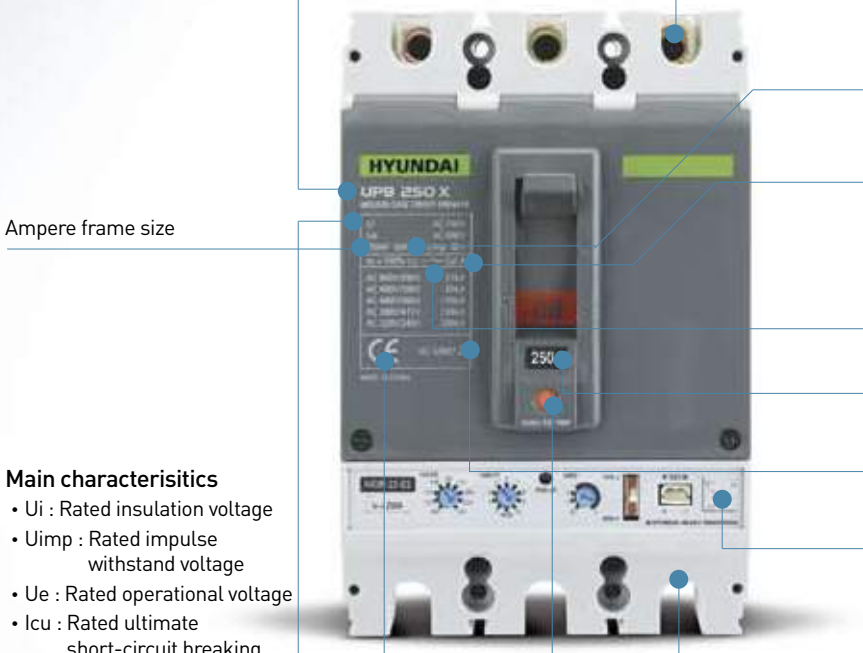

Model name
- UPB : Type
- 250 : Ampere frame size
- X : Recognition code for order

Main characterisitics
- Ui : Rated insulation voltage
- Uimp : Rated impulse withstand voltage
- Ue : Rated operational voltage
- Icu : Rated ultimate short-circuit breaking capacity
- Ics : Rated service short-circuit breaking capacity

Approvals and certificates

Ampere frame size

Line side terminal

Rated frequency

Utilization category

Suitability of isolation

Rated current

Standard

Trip unit

Trip button

Load side terminal

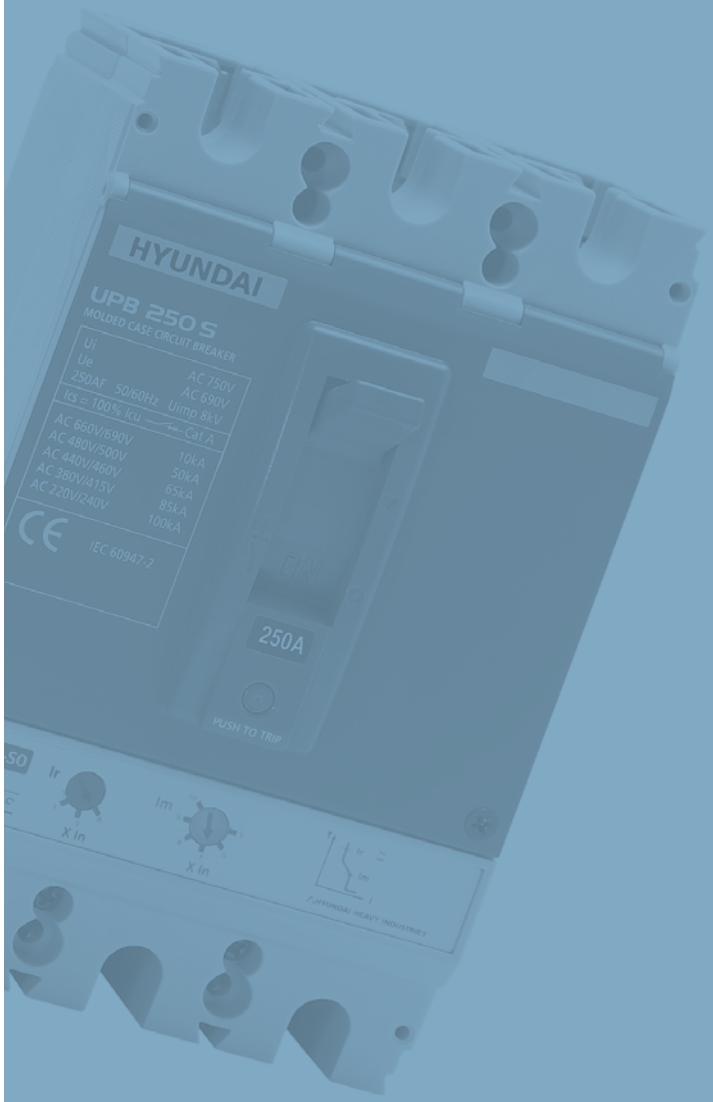

Quick Selection Table

Quick Selection Table

| UAB type / 30-100AF |

Ampere frame	Model	Number of poles	Rated current (A)	Breaking capacity [Icu] (kA r.m.s.)				Trip mechanism & Characteristics			Dimensions (mm)		
				AC220V AC240V	AC380V AC415V	AC440V AC460V	AC600V AC660V	Hydraulic magnetic	Thermal magnetic		Width	Height	Depth
									Fixed	Adjustable			
30	UAB30C	2, 3	3, 5, 10, 15, 20, 30	10	7.5/5	5	2.5	○	–	–	50/75	130	60
	UAB30R	2, 3	5, 10, 15, 20, 30	25	14/10	10	5	○	–	–			
50	UAB50C	2, 3, 4	5, 10, 15, 20, 30, 40, 50	10	7.5/5	5	2.5	○	–	–	50/75/100	130	60
	UAB50R	2, 3, 4	5, 10, 15, 20, 30, 40, 50	25	14/10	10	5	○	–	–			
	UAB50S	2, 3, 4	15, 16, 20, 25, 30, 32, 40, 50	42	25	21	7.5	–	○	○ 1)			
	UAB50H	2, 3, 4	15, 16, 20, 25, 30, 32, 40, 50	50	30	25	10	–	○	○ 1)			
60	UAB60C	2, 3, 4	5, 10, 15, 20, 30, 40, 50, 60	10	7.5/5	5	2.5	○	–	-			
	UAB60R	2, 3, 4	5, 10, 15, 20, 30, 40, 50, 60	25	14/10	10	5	○	–	–			
100	UAB100C	2, 3, 4	5, 10, 15, 20, 30, 40, 50, 60, 75, 100	25	14/10	10	5	○	–	–			
	UAB100R	2, 3, 4	15, 16, 20, 25, 30, 32, 40, 50, 60, 63, 75, 80, 100	42	25	21	7.5	–	○	○ 1)			
	UAB100S	2, 3, 4	15, 16, 20, 25, 30, 32, 40, 50, 60, 63, 75, 80, 100	50	30	25	10	–	○	○ 1)			

※ - The breaking capacity highlighted with blue and thick type is standard nominal value for each model in this catalogue.
1) Not applicable to 2P breaker.

| UCB type / 50-1600AF |

Ampere frame	Model	Number of poles	Rated current (A)	Breaking capacity [Icu] (kA r.m.s.)				Trip mechanism & Characteristics			Dimensions (mm)		
				AC220V AC240V	AC380V AC415V	AC440V AC460V	AC600V AC660V	Thermal magnetic		Electronic	Width	Height	Depth
								Fixed	Adjustable				
50	UCB50R	2, 3, 4	15, 20, 30, 40, 50	50	30/25	25	10	○	–	–	60/90/120	155	60
	UCB50H	∗2, 3, 4	15, 16, 20, 25, 30, 32, 40, 50	85	42	42	20	○	○	–	90/90/120	155	60
	UCB50L	∗2, 3, 4	15, 16, 20, 25, 30, 32, 40, 50	100	50	50	25	○	○	–			
125	UCB100R	2, 3, 4	15, 16, 20, 25, 30, 32, 40, 50, 60, 63, 75, 80, 100, 125	50	30/25	25	10	○	○	–	60/90/120	155	60
	UCB100S	2, 3, 4	15, 16, 20, 25, 30, 32, 40, 50, 60, 63, 75, 80, 100, 125	65	42/36	35	18	○	○	–			
	UCB100H	∗2, 3, 4	15, 16, 20, 25, 30, 32, 40, 50, 60, 63, 75, 80, 100, 125	85	42	42	20	○	○	–	90/90/120	155	60
	UCB100L	∗2, 3, 4	15, 16, 20, 25, 30, 32, 40, 50, 60, 63, 75, 80, 100, 125	100	50	50	25	○	○	–			
160	UCB160H	∗2, 3, 4	100, 125, 160	85	42	42	20	○	○	–	105/105/140	165	60
	UCB160L	∗2, 3, 4	100, 125, 160	100	50	50	25	○	○	–			
250	UCB250R	∗2, 3, 4	100, 125, 150, 160, 175, 200, 225, 250	35	25/18	18	7.5	○	○	–	105/105/140	164	60
	UCB250S	∗2, 3, 4	100, 125, 150, 160, 175, 200, 225, 250	50	35/25	25	10	○	○	–			
	UCB250N	∗2, 3, 4	100, 125, 150, 160, 175, 200, 225, 250	65	42/36	35	18	○	○	–			
	UCB250H	∗2, 3, 4	125, 150, 160, 175, 200, 225, 250	85	42	42	20	○	○	–	105/105/140	165	60
	UCB250L	∗2, 3, 4	125, 150, 160, 175, 200, 225, 250	100	50	50	25	○	○	–			
400	UCB400R	∗2, 3, 4	250, 300, 320, 350, 400	35	30	25	18	○	○	–	140/140/185	257	110
	UCB400S	∗2, 3, 4	250, 300, 320, 350, 400	50	42	35	22	○	○	–			
	UCB400H	∗2, 3, 4	250, 300, 320, 350, 400	85	65	50	25	○	○	–			
	UCB400L	∗2, 3, 4	250, 300, 320, 350, 400	125	100	85	30	○	○	–			
630	UCB630R	∗2, 3, 4	500, 630	50	45	35	22	○	○	–	210/210/280	280	110
	UCB630S	∗2, 3, 4	500, 630	100	65	50	25	○	○	–			
	UCB630H	∗2, 3, 4	500, 630	100	85	65	35	○	○	–			
	UCB630L	∗2, 3, 4	500, 630	125	100	85	35	○	○	–			
800	UCB800R	∗2, 3, 4	700, 800	50	45	35	25	○	○	–			
	UCB800S	∗2, 3, 4	700, 800	100	65	50	25	○	○	–			
	UCB800H	∗2, 3, 4	700, 800	100	85	65	35	○	○	–			
	UCB800L	∗2, 3, 4	700, 800	125	100	85	35	○	○	–			
1000	UCB1000S	3, 4	505-1,000	100	100	75	40	–	–	○	210/280	370	110
	UCB1000L	3, 4	505-1,000	150	130	100	60	–	–	○	210/280	370	200
1250	UCB1250S	3, 4	630-1,250	100	100	75	40	–	–	○	210/280	370	110
	UCB1250L	3, 4	630-1,250	150	130	100	60	–	–	○	210/280	370	200
1600	UCB1600S	3	640-1,600	100	65	45	25	–	–	○	210	371	151

※ - The breaking capacity highlighted with blue and thick type is standard nominal value for each model in this catalogue.
∗2P breaker has same dimension as 3P breaker, but the middle pole is removed.

| UPB type / 125-630AF |

Ampere frame	Model	Number of poles	Rated current (A)	Breaking capacity [Icu] (kA r.m.s.)				Trip mechanism & Characteristics			Dimensions (mm)		
				AC220V AC240V	AC380V AC415V	AC440V AC460V	AC660V AC690V	Thermal magnetic		Electronic	Width	Height	Depth
								Fixed	Adjustable				
125	UPB100S	3, 4	15, 16, 20, 25, 30, 32, 40, 50, 60, 63, 75, 80, 100, 125[1]	100	85	65	10	○	○	○	105/140	165	86.5
	UPB100H	3, 4	15, 16, 20, 25, 30, 32, 40, 50, 60, 63, 75, 80, 100, 125[1]	130	100	85	10	○	○	○			
	UPB100L	3, 4	15, 16, 20, 25, 30, 32, 40, 50, 60, 63, 75, 80, 100, 125[1]	150	130	100	25	○	○	○			
	UPB100X	3, 4	15, 16, 20, 25, 30, 32, 40, 50, 60, 63, 75, 80, 100, 125[1]	200	150	150	25	○	○	○			
160	UPB160S	3, 4	100, 125, 160[1]	100	85	65	10	○	○	○			
	UPB160H	3, 4	100, 125, 160[1]	130	100	85	10	○	○	○			
	UPB160L	3, 4	100, 125, 160[1]	150	130	100	25	○	○	○			
	UPB160X	3, 4	100, 125, 160[1]	200	150	150	25	○	○	○			
250	UPB250S	3, 4	125, 150, 160, 175, 200, 225, 250[1]	100	85	65	10	○	○	○			
	UPB250H	3, 4	125, 150, 160, 175, 200, 225, 250[1]	130	100	85	10	○	○	○			
	UPB250L	3, 4	125, 150, 160, 175, 200, 225, 250[1]	150	130	100	25	○	○	○			
	UPB250X	3, 4	125, 150, 160, 175, 200, 225, 250[1]	200	150	150	25	○	○	○			
400	UPB400S	3, 4	200-400	100	85	65	10	–	–	○	140/185	255	117
	UPB400H	3, 4	200-400	130	100	85	10	–	–	○			
	UPB400L	3, 4	200-400	150	130	100	25	–	–	○			
	UPB400X	3, 4	200-400	200	150	150	25	–	–	○			
630	UPB630S	3, 4	320-630	100	85	65	10	–	–	○			
	UPB630H	3, 4	320-630	130	100	85	10	–	–	○			
	UPB630L	3, 4	320-630	150	130	100	25	–	–	○			
	UPB630X	3, 4	320-630	200	150	150	25	–	–	○			

※ - The breaking capacity highlighted with blue and thick type is standard nominal value for each model in this catalogue.
1) Rated current of electronic types are as followings; · UPB100: 50-125A · UPB160: 63-160A · UPB250: 100-250A

| Motor protection / UPB type 125-250AF |

Ampere frame	Model	Number of poles	Rated current (A)	Breaking capacity [Icu] (kA r.m.s.)				Dimensions (mm)		
				AC220V AC240V	AC380V AC415V	AC440V AC460V	AC660V AC690V	Width	Height	Depth
125	UPB100H	3	2.5, 3.2, 6.3, 12.5, 20, 32, 50, 63, 80, 100	130	100	85	10	105	165	86.5
	UPB100L	3	2.5, 3.2, 6.3, 12.5, 20, 32, 50, 63, 80, 100	150	130	100	25			
250	UPB250H	3	125, 150, 175, 200, 225	130	100	85	10			
	UPB250L	3	125, 150, 175, 200, 225	150	130	100	25			

※ The breaking capacity highlighted with blue and thick type is standard nominal value for each model in this catalogue.

| Q-class (for nuclear power plant application) / HBL type 100-225AF |

Ampere frame	Model	Number of poles	Rated current (A)	Breaking capacity [Icu] (kA r.m.s.)					Characteristics		Dimensions (mm)		
				AC220V AC240V	AC380V AC415V	AC440V AC460V	AC480V AC500V	AC660V AC690V	E1 class	Motor protection	Width	Height	Depth
100	HBL103U	3	15, 20, 30, 40, 50, 60, 75, 100	200	150	100	85	25	–	–	105	165	86.5
	HBL103UQ	3	15, 20, 30, 40, 50, 60, 75, 100	200	150	100	85	25	○	–			
	HBL103UM	3	2.5, 3.2, 6.3, 12.5, 20, 32, 50, 63, 80, 100	200	150	100	85	25	–	○			
	HBL103UMQ	3	2.5, 3.2, 6.3, 12.5, 20, 32, 50, 63, 80, 100	200	150	100	85	25	○	○			
225	HBL203U	3	125, 150, 175, 200, 225	200	150	100	85	25	–	–			
	HBL203UQ	3	125, 150, 175, 200, 225	200	150	100	85	25	○	–			
	HBL203UM	3	125, 150, 175, 200, 225	200	150	100	85	25	–	○			
	HBL203UMQ	3	125, 150, 175, 200, 225	200	150	100	85	25	○	○			

※ The breaking capacity highlighted with blue and thick type is standard nominal value for each model in this catalogue.

Quick Selection Table

| Switch disconnector / 50-1250AF |

Type	Ampere frame	Model	Number of poles	Rated current (A)	Dimensions (mm)		
					Width	Height	Depth
UCD	50	UCD50H	3	50	90	155	60
	100	UCD100S	3	100			
	125	UCD100H	3	125			
	160	UCD160H	3	160	105	165	60
	250	UCD250S	3	250	105	164	60
		UCD250H	3	250	105	165	60
	400	UCD400S	3	400	140	257	110
	630	UCD630S	3	630	210	280	110
	800	UCD800S	3	800			
	1000	UCD1000S	3	1,000	210	370	110
	1250	UCD1250S	3	1,250			

Type	Ampere frame	Model	Number of poles	Rated current (A)	Dimensions (mm)		
					Width	Height	Depth
UAD	50	UAD50C	3	50	75	130	60
		UAD50S	3	50			
	100	UAD100R	3	100			
UPD	125	UPD100S	3	125	105	165	86.5
	160	UPD160S	3	160			
	250	UPD250S	3	250			
	400	UPD400S	3	400	140	255	117
	630	UPD630S	3	630			

| Miniature type / 30-100AF |

Type	Ampere frame	Model	Number of poles	Rated current (A)	Breaking capacity [Icu] (kA r.m.s.)			Dimensions (mm)		
					AC220V AC240V	AC380V AC415V	AC440V AC460V	Width	Height	Depth
UMB	30	UMB30Ra	2	15, 20, 30	2.5	–	–	33	70	42
		UMB30Rb	2	15, 20, 30	2.5	–	–	33	70	60
		UMB30Sg	2	15, 20, 30	5	–	–	35	80	60
		UMB30Hg	2	15, 20, 30	10	–	–			
	50	UMB50Sg	2	15, 20, 30, 40, 50	5	–	–			
		UMB50Hg	2	15, 20, 30, 40, 50	10	–	–			
UDB	30	UDB30S	2, 3	3, 5, 10, 15, 20, 30	5	2.5	2.5	50/75	96	60
		UDB30H	2, 3	5, 10, 15, 20, 30	10	5	5			
	50	UDB50S	2, 3	5, 10, 15, 20, 30, 40, 50	5	2.5	2.5			
		UDB50H	2, 3	5, 10, 15, 20, 30, 40, 50	10	5	5			
	100	UDB100S	∗2, 3	15, 20, 30, 40, 50, 60, 75, 100	5	2.5	2.5	75	96	60
		UDB100H	∗2, 3	15, 20, 30, 40, 50, 60, 75, 100	10	5	5			
UMG	30	UMG30Ca	2	15, 20, 30	1.5	–	–	33	70	42
		UMG30Cb	2	15, 20, 30	1.5	–	–	33	70	60
		UMG30Ra	2	15, 20, 30	2.5	–	–	33	70	42
		UMG30Rb	2	15, 20, 30	2.5	–	–	33	70	60
		UMG30Cd	2	15, 20, 30	1.5	–	–	62	82	42
		UMG30Rd	2	15, 20, 30	2.5	–	–			
		UMG30Sg	2	15, 20, 30	5	–	–	35	80	60
		UMG30Hg	2	15, 20, 30	10	–	–			
	50	UMG50Sg	2	15, 20, 30, 40, 50	5	–	–			
		UMG50Hg	2	15, 20, 30, 40, 50	10	–	–			
UDG	30	UDG30S	2, 3	3, 5, 10, 15, 20, 30	5	2.5	2.5	50/75	96	60
		UDG30H	2, 3	5, 10, 15, 20, 30	10	5	5			
	50	UDG50S	2, 3	5, 10, 15, 20, 30, 40, 50	5	2.5	2.5			
		UDG50H	2, 3	5, 10, 15, 20, 30, 40, 50	10	5	5			
	100	UDG100S	∗2, 3	15, 20, 30, 40, 50, 60, 75, 100	5	2.5	2.5	75	96	60
		UDG100H	∗2, 3	15, 20, 30, 40, 50, 60, 75, 100	10	5	5			

※ - KS certified products. English nameplate and 50Hz marking are not available.
- The breaking capacity highlighted with blue and thick type is standard nominal value for each model in this catalogue.
∗2P breaker has same dimension as 3P breaker, but the middle pole is removed.



Rating Overview

Rating Overview

| UAB type / 30-50AF |

Model					UAB30		UAB50			
Figure										
Ampere frame size					30AF		50AF			
Number of poles (P)					2, 3		2, 3, 4		2, 3, 4	
Degree of protection (with terminal cover)					IP20		IP20		IP20	
Utilization category					A		A		A	
Suitability of isolation					○		○		○	
Protection					overload, inst., short-circuit		overload, inst., short-circuit		overload, inst., short-circuit	
Rating	Rated current (A)				3,5,10,15,20,30	5,10,15,20,30	5,10,15,20,30,40,50		15,16,20,25,30,32,40,50	
	Rated insulation voltage [Ui] (V)				AC690		AC690		AC690	
	Rated operational voltage [Ue] (V)				AC660		AC660		AC660	
					-		-		DC250	
	Rated impulse withstand voltage [Uimp] (kV)				6		6		6	
Rated short-circuit breaking capacity IEC 60947-2 K 60947-2	Ultimate [Icu] (kA r.m.s.)	Recognition code for order			C	R	C	R	S	H
		AC600/660V, 50-60Hz			2.5	5	2.5	5	7.5	10
		AC480/500V, 50-60Hz			2.5	7.5	2.5	7.5	7.5	14
		AC440/460V, 50-60Hz			5	10	5	10	21	25
		AC380/415V, 50-60Hz			**7.5/5**	**14/10**	**7.5/5**	**14/10**	**25**	**30**
		AC220/240V, 50-60Hz			10	25	10	25	42	50
		DC250V			2.5	5	2.5	5	10	14
		DC125V			5	10	5	10	15	20
	Service [Ics]	% of [Icu]			50		50		25	
Trip mechanism & Protection characteristics	Hydraulic magnetic	Fixed thermal, Fixed instantaneous		INST	○		○		–	
					12×In		12×In		–	
	Thermal magnetic	Fixed thermal, Fixed instantaneous		INST	–		–		○	
					–		–		15-32A: 20×In, 40-100A: 10×In	
		Adjustable thermal, Fixed instantaneous		LTD	–		–		(0.8-0.9-1)×In	
				INST	–		–		15-32A: 20×In, 40-100A: 10×In	
Mounting	Direct mounting by screw				○		○		○	
	Plug-in	for Switchboard	Both line & load side		○[1]		○[1]		○[1]	
			Line side only		○[1]		○[1]		○[1]	
		for Distribution board			○[1]		○[1]		○[1]	
	DIN-rail	with DIN-rail adaptor			–		–		○	
Terminal connection	Screw				○		○		○	
Accessories	Signal	Auxiliary switch		AUX	○		○		○	
		Trip alarm switch		ALT	○		○		○	
		Shunt trip		SHT	○		○		○	
		Under voltage trip		UVT	○		○		○	
	Operating	Operating handle	Surface type	TFG	○[1]		○[2]		○[2]	
			Extended type	TFH	○[1]		○[2]		○[2]	
		Motor operator		MOT	○		○		○	
		Mechanical interlock		MIF	○[1]		○[2]		○[2]	
		Padlock plate		PLD	○		○		○	
	Mounting	DIN-rail adaptor		DRA	–		–		○	
		Plug-in mounting base		TDM	○[1]		○[1]		○[1]	
	Terminal	Cage terminal block		CTB	○		○		○	
		Terminal cover		TCF	○		○		○	
		Interpole barrier		TQQ	○[3]		○[3]		○[3]	
Durability (times)	Mechanical operation				25,000		25,000		25,000	
	Electrical operation				15,000		15,000		15,000	
Dimensions (mm)	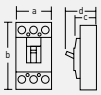	2/3/4P	a	Width	50/75		50/75/100		50/75/100	
			b	Height	130		130		130	
			c	Depth	60		60		60	
			d		82		82		82	
Weight (kg, breaker only)	2/3/4P				0.45/0.65		0.45/0.65/0.85		0.6/0.78/0.96	

※ - The breaking capacity highlighted with blue and thick type is standard nominal value for each model in this catalogue.
1) Available for 3P breaker 2) Available for 3P, 4P breaker
3) Supplied as standard component

| UAB type / 60-100AF |

Model					UAB60		UAB100		
Figure									
Ampere frame size					60AF		100AF		
Number of poles (P)					2, 3, 4		2, 3, 4	2, 3, 4	
Degree of protection (with terminal cover)					IP20		IP20	IP20	
Utilization category					A		A	A	
Suitability of isolation					○		○	○	
Protection					overload, inst., short-circuit		overload, inst., short-circuit	overload, inst., short-circuit	
Rating	Rated current (A)				5, 10, 15, 20, 30, 40, 50, 60		5, 10, 15, 20, 30, 40, 50, 60, 75, 100	15, 16, 20, 25, 30, 32, 40, 50, 60, 63, 75, 80, 100	
	Rated insulation voltage [Ui] (V)				AC690		AC690	AC690	
	Rated operational voltage [Ue] (V)				AC660		AC660	AC660	
					–		–	DC250	
	Rated impulse withstand voltage [Uimp] (kV)				6		6	6	
Rated short-circuit breaking capacity IEC 60947-2 K 60947-2	Ultimate [Icu] (kA r.m.s.)	Recognition code for order			C	R	C	R	S
		AC600/660V, 50-60Hz			2.5	5	5	7.5	10
		AC480/500V, 50-60Hz			2.5	7.5	7.5	7.5	14
		AC440/460V, 50-60Hz			5	10	10	21	25
		AC380/415V, 50-60Hz			7.5/5	14/10	14/10	25	30
		AC220/240V, 50-60Hz			10	25	25	42	50
		DC250V			2.5	5	5	10	14
		DC125V			5	10	10	15	20
	Service [Ics]	% of [Icu]			50		50	25	
Trip mechanism & Protection characteristics	Hydraulic magnetic	Fixed thermal, Fixed instantaneous		INST	○		○	–	
					12×In		12×In	–	
	Thermal magnetic	Fixed thermal, Fixed instantaneous		INST	–		–	○	
					–		–	15-32A: 20×In, 40-100A: 10×In	
		Adjustable thermal, Fixed instantaneous		LTD	–		–	(0.8-0.9-1)×In[2]	
				INST	–		–	15-32A: 20×In, 40-100A: 10×In	
Mounting	Direct mounting by screw				○		○	○	
	Plug-in	for Switchboard	Both line & load side		○		○	○	
			Line side only		○[1]		○[1]	○[1]	
		for Distribution board			○[1]		○[1]	○[1]	
	DIN-rail	with DIN-rail adaptor			–		–	○	
Terminal connection	Screw				○		○	○	
Accessories	Signal	Auxiliary switch		AUX	○		○	○	
		Trip alarm switch		ALT	○		○	○	
		Shunt trip		SHT	○		○	○	
		Under voltage trip		UVT	○		○	○	
	Operating	Operating handle	Surface type	TFG	○[2]		○[2]	○[2]	
			Extended type	TFH	○[2]		○[2]	○[2]	
		Motor operator		MOT	○		○	○	
		Mechanical interlock		MIF	○[2]		○[2]	○[2]	
		Padlock plate		PLD	○		○	○	
	Mounting	DIN-rail adaptor		DRA	–		–	○	
		Plug-in mounting base		TDM	○[1]		○[1]	○[1]	
	Terminal	Cage terminal block		CTB	○		○	○	
		Terminal cover		TCF	○		○	○	
		Interpole barrier		TQQ	○[3]		○[3]	○[3]	
Durability (times)	Mechanical operation				25,000		25,000	25,000	
	Electrical operation				10,000		10,000	10,000	
Dimensions (mm) 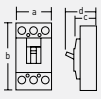	2/3/4P	a	Width		50/75/100		50/75/100	50/75/100	
		b	Height		130		130	130	
		c	Depth		60		60	60	
		d			82		82	82	
Weight (kg, breaker only)	2/3/4P				0.45/0.65/0.85		0.45/0.65/0.85	0.6/0.78/0.96	

※ - The breaking capacity highlighted with blue and thick type is standard nominal value for each model in this catalogue.
1) Available for 3P breaker 2) Available for 3P, 4P breaker
3) Supplied as standard component

Rating Overview

| UCB type / 50-125AF |

Model					UCB50			UCB100			
Figure											
Ampere frame size					50AF			100AF		125AF	
Number of poles (P)					2, 3, 4	∗2, 3, 4		2, 3, 4		∗2, 3, 4	
Degree of protection (with terminal cover)					IP20	IP20		IP20		IP20	
Utilization category					A	A		A		A	
Suitability of isolation					○	○		○		○	
Protection					overload, inst., short-circuit	overload, inst., short-circuit		overload, inst., short-circuit		overload, inst., short-circuit	
Rating	Rated current (A)				15,20,30,40,50	15,16,20,25,30,32,40,50		15,16,20,25,30,32,40, 50,60,63,75,80,100,125		15,16,20,25,30,32,40, 50,60,63,75,80,100,125	
	Rated insulation voltage [Ui] (V)				AC690	AC690		AC690		AC690	
	Rated operational voltage [Ue] (V)				AC660	AC660		AC660		AC660	
					DC250	DC250		DC250		DC250	
	Rated impulse withstand voltage [Uimp] (kV)				6	6		6		6	
Rated short-circuit breaking capacity IEC 60947-2 K 60947-2	Ultimate [Icu] (kA r.m.s.)	Recognition code for order			R	H	L	R	S	H	L
		AC600/660V, 50-60Hz			10	20	25	10	18	20	25
		AC480/500V, 50-60Hz			14	30	35	14	25	30	35
		AC440/460V, 50-60Hz			25	42	50	25	35	42	50
		AC380/415V, 50-60Hz			30/25	42	50	30/25	42/36	42	50
		AC220/240V, 50-60Hz			50	85	100	50	65	85	100
		DC250V			14	25	40	14	18	25	40
		DC125V			20	40	60	20	25	40	60
	Service [Ics]	% of [Icu]			50	50		50		50	
Trip mechanism & Protection characteristics	Thermal magnetic	Fixed thermal, Fixed instantaneous			○	○		○		○	
				INST	10×In	15-32A: 15×In, 40-50A: 10×In		10×In		15-32A: 15×In, 40-125A: 10×In	
		Adjustable thermal, Fixed instantaneous		LTD	–	(0.8-0.9-1)×In		(0.8-0.9-1)×In		(0.8-0.9-1)×In	
				INST	–	15-32A: 15×In, 40-50A: 10×In		10×In		15-32A: 15×In, 40-125A: 10×In	
Mounting	Direct mounting by screw				○	○		○		○	
	Plug-in	for Switchboard	Both line & load side		○[1]	○[1]		○[1]		○[1]	
			Line side only		○[1]	○[1]		○[1]		○[1]	
		for Distribution board			○[1]	○[1]		○[1]		○[1]	
Terminal connection	Screw				○	○		○		○	
Accessories	Signal	Auxiliary switch		AUX	○	○		○		○	
		Trip alarm switch		ALT	○	○		○		○	
		Shunt trip		SHT	○	○		○		○	
		Under voltage trip		UVT	○	○		○		○	
	Operating	Operating handle	Surface type	TFG	○[2]	○		○[2]		○	
			Extended type	TFH	○[2]	○		○[2]		○	
		Motor operator		MOT	○	○		○		○	
		Mechanical interlock		MIF	○	○		○[2]		○	
		Padlock plate		PLD	○	○		○		○	
	Mounting	Plug-in mounting base		TDM	○[1]	○		○[1]		○[1]	
	Terminal	Cage terminal block		CTB	○	○		○		○	
		Terminal cover		TCF	○	○		○		○	
		Interpole barrier		TQQ	○[3]	○[3]		○[3]		○[3]	
Durability (times)	Mechanical operation				25,000	25,000		25,000		25,000	
	Electrical operation				10,000	10,000		10,000		10,000	
Dimensions (mm)	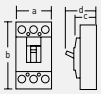	2/3/4P	a	Width	60/90/120	90[4]/90/120		60/90/120		90[4]/90/120	
			b	Height	155	155		155		155	
			c	Depth	60	60		60		60	
			d		84.5	84.5		84.5		84.5	
Weight (kg, breaker only)	2/3/4P				0.7/1.0/1.2	0.9/1.0/1.3		0.7/1.0/1.2		0.9/1.0/1.3	

※ - The breaking capacity highlighted with blue and thick type is standard nominal value for each model in this catalogue.
1) Available for 3P breaker
2) Available for 3P, 4P breaker
3) Supplied as standard component
4) ∗2P breaker has same dimension as 3P breaker, but the middle pole is removed.

| UCB type / 160-250AF |

Model				UCB160		UCB250				
Figure										
Ampere frame size				160AF		250AF				
Number of poles (P)				∗2, 3, 4		∗2, 3, 4			∗2, 3, 4	
Degree of protection (with terminal cover)				IP20		IP20			IP20	
Utilization category				A		A			A	
Suitability of isolation				○		○			○	
Protection				overload, inst., short-circuit		overload, inst., short-circuit			overload, inst., short-circuit	
Rating	Rated current (A)			100, 125, 160		100, 125, 150, 160, 175, 200, 225, 250			125, 150, 160, 175, 200, 225, 250	
	Rated insulation voltage [Ui] (V)			AC690		AC690			AC690	
	Rated operational voltage [Ue] (V)			AC660		AC660			AC660	
				DC250		DC250			DC250	
	Rated impulse withstand voltage [Uimp] (kV)			6		6			6	
Rated short-circuit breaking capacity IEC 60947-2 K 60947-2	Ultimate [Icu] (kA r.m.s.)	Recognition code for order		H	L	R	S	N	H	L
		AC600/660V, 50-60Hz		20	25	7.5	10	18	20	25
		AC480/500V, 50-60Hz		30	35	10	14	25	30	35
		AC440/460V, 50-60Hz		42	50	18	25	35	42	50
		AC380/415V, 50-60Hz		**42**	**50**	**25/18**	**35/25**	**42/36**	**42**	**50**
		AC220/240V, 50-60Hz		85	100	35	50	65	85	100
		DC250V		25	40	10	14	18	25	40
		DC125V		40	60	15	20	25	40	60
	Service [Ics]	% of [Icu]		50		50			50	
Trip mechanism & Protection characteristics	Thermal magnetic	Fixed thermal, Fixed instantaneous	INST	10×In		10×In			10×In	
		Adjustable thermal, Fixed instantaneous	LTD	(0.8-0.9-1)×In		(0.8-0.9-1)×In			(0.8-0.9-1)×In	
			INST	10×In		10×In			10×In	
Mounting	Direct mounting by screw			○		○			○	
	Plug-in	for Switchboard	Both line & load side	○[1]		○[1]			○[1]	
			Line side only	○[1]		○[1]			○[1]	
		for Distribution board		○[1]		○[1]			○[1]	
Terminal connection	Screw			○		○			○	
	Bus bar			○		○			○	
Accessories	Signal	Auxiliary switch	AUX	○		○			○	
		Trip alarm switch	ALT	○		○			○	
		Shunt trip	SHT	○		○			○	
		Under voltage trip	UVT	○		○			○	
	Operating	Operating handle	Surface type TFG	○		○			○	
			Extended type TFH	○		○			○	
		Motor operator	MOT	○		○			○	
		Mechanical interlock	MIF	○		○			○	
		Padlock plate	PLD	○		○			○	
	Mounting	Plug-in mounting base	TDM	○[1]		○[1]			○[1]	
	Terminal	Terminal bus bar	TBB	○		○			○	
		Cage terminal block	CTB	○		○			○	
		Terminal cover	TCF	○		○			○	
		Interpole barrier	TQQ	○[2]		○[2]			○[2]	
Durability (times)	Mechanical operation			25,000		25,000			25,000	
	Electrical operation			10,000		10,000			10,000	
Dimensions (mm) 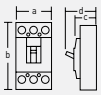	2/3/4P	a	Width	105[3]/105/140		105[3]/105/140			105[3]/105/140	
		b	Height	165		164			165	
		c	Depth	60		60			60	
		d		84.5		84			84.5	
Weight (kg, breaker only)	2/3/4P			1.1/1.3/1.6		1.1/1.2/1.5			1.1/1.3/1.6	

※ - The breaking capacity highlighted with blue and thick type is standard nominal value for each model in this catalogue.
1) Available for 3P breaker 2) Supplied as standard component
3) ∗2P breaker has same dimension as 3P breaker, but the middle pole is removed.

Rating Overview

| UCB type / 400-800AF |

Model					UCB400				UCB630				UCB800			
Figure																
Ampere frame size					400AF				630AF				800AF			
Number of poles (P)					∗2, 3, 4				∗2, 3, 4				∗2, 3, 4			
Degree of protection (with terminal cover)					IP20				IP20				IP20			
Utilization category					A				A				A			
Suitability of isolation					○				○				○			
Protection					overload, inst., short-circuit				overload, inst., short-circuit				overload, inst., short-circuit			
Rating	Rated current (A)				250, 300, 320, 350, 400				500, 630				700, 800			
	Rated insulation voltage [Ui] (V)				AC690				AC690				AC690			
	Rated operational voltage [Ue] (V)				AC660				AC660				AC660			
					DC250				DC250				DC250			
	Rated impulse withstand voltage [Uimp] (kV)				6				6				6			
Rated short-circuit breaking capacity IEC 60947-2 K 60947-2	Ultimate [Icu] (kA r.m.s.)	Recognition code for order			R	S	H	L	R	S	H	L	R	S	H	L
		AC600/660V, 50-60Hz			18	22	25	30	22	25	35	35	25	25	35	35
		AC480/500V, 50-60Hz			18	25	35	65	25	45	50	65	35	45	50	65
		AC440/460V, 50-60Hz			25	35	50	85	35	50	65	85	35	50	65	85
		AC380/415V, 50-60Hz			30	42	65	100	45	65	85	100	45	65	85	100
		AC220/240V, 50-60Hz			35	50	85	125	50	100	100	125	50	100	100	125
		DC250V			14	25	40	40	20	40	40	40	20	40	40	40
		DC125V			20	30	50	60	30	50	50	60	30	50	50	60
	Service [Ics]	% of [Icu]			50				50				50			
Trip mechanism & Protection characteristics	Thermal magnetic	Fixed thermal, Fixed instantaneous		INST	○				○				○			
					10×In				10×In				10×In			
		Adjustable thermal, Fixed instantaneous		LTD	(0.8-0.9-1)×In				(0.8-0.9-1)×In				(0.8-0.9-1)×In			
				INST	10×In				10×In				10×In			
Mounting	Direct mounting by screw				○				○				○			
	Plug-in	for Switchboard	Both line & load side		○[1]				○[1]				○[1]			
			Line side only		○[1]				○[1]				○[1]			
Terminal connection		Screw			○				○				○			
		Bus bar			○				○				○			
Accessories	Signal	Auxiliary switch		AUX	○				○				○			
		Trip alarm switch		ALT	○				○				○			
		Shunt trip		SHT	○				○				○			
		Under voltage trip		UVT	○				○				○			
	Operating	Operating handle	Surface type	TFG	○				○				○			
			Extended type	TFH	○				○				○			
		Motor operator		MOT	○				○				○			
		Mechanical interlock		MIF	○				○				○			
		Padlock plate		PLD	○				○				○			
		Extension handle		THA	○[2]				○[2]				○[2]			
	Mounting	Plug-in mounting base		TDM	○[1]				○[1]				○[1]			
	Terminal	Terminal bus bar		TBB	○				○				○			
		Cage terminal block		CTB	○				○				○			
		Terminal cover		TCF	○				○				○			
		Interpole barrier		TQQ	○[2]				○[2]				○[2]			
Durability (times)	Mechanical operation				20,000				20,000				10,000			
	Electrical operation				6,000				6,000				3,000			
Dimensions (mm)	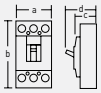	2/3/4P	a	Width	140[3]/140/185				210[3]/210/280				210[3]/210/280			
			b	Height	257				280				280			
			c	Depth	110				110				110			
			d		145				145				145			
Weight (kg, breaker only)	2/3/4P				4/4.5/5.4				8.7/9.5/12.5				8.7/9.5/12.5			

※ - The breaking capacity highlighted with blue and thick type is standard nominal value for each model in this catalogue.
1) Available for 3P breaker 2) Supplied as standard component
3) ∗2P breaker has same dimension as 3P breaker, but the middle pole is removed.

| UCB type / 1000-1600AF |

Model					UCB1000		UCB1250		UCB1600
Figure									
Ampere frame size					1000AF		1250AF		1600AF
Number of poles (P)					3, 4		3, 4		3
Degree of protection (without terminal bus bar)					IP20		IP20		IP20
Utilization category					A		A		A
Suitability of isolation					○		○		○
Protection					overload, inst., short-circuit		overload, inst., short-circuit		overload, inst., short-circuit
Rating	Rated current (A)				505-1,000		630-1,250		640-1,600
	Rated insulation voltage [Ui] (V)				AC750		AC750		AC750
	Rated operational voltage [Ue] (V)				AC690		AC690		AC690
	Rated impulse withstand voltage [Uimp] (kV)				8		8		8
Rated short-circuit breaking capacity IEC 60947-2 K 60947-2	Ultimate [Icu] (kA r.m.s.)	Recognition code for order			S	L	S	L	S
		AC600/660V, 50-60Hz			40	60	40	60	25
		AC480/500V, 50-60Hz			75	100	75	100	35
		AC440/460V, 50-60Hz			75	100	75	100	45
		AC380/415V, 50-60Hz			100	130	100	130	65
		AC220/240V, 50-60Hz			100	150	100	150	100
	Service [Ics]	% of [Icu]			50		50		50
Trip mechanism & Protection characteristics	Electronic	Long time delay		LTD	(0.5-1)[1] × In (15 setting)		(0.5-1)[1] × In (15 setting)		(0.4-1)[2] × In (8 setting)
		Short time delay		STD	(2-4-6-8-10) × Ir		(2-4-6-8-10) × Ir		–
		Instantaneous		INST	(3-6-8-10-11) × In		(3-6-8-10-11) × In		(2-3-4-5-6-7-8-10) × In
		Ground fault trip		GFT	(0.2-0.3-0.4) × In		(0.2-0.3-0.4) × In		–
		Pre-trip alarm		PTA	0.9 × Ir		0.9 × Ir		–
		I^2T lamp			○		○		–
		Pick-up LED			○		○		○
Mounting	Direct mounting by screw				○		○		○
Terminal connection	Bus bar				○		○		○
Accessories	Signal	Auxiliary switch		AUX	○		○		○
		Trip alarm switch		ALT	○		○		–
		Shunt trip		SHT	○		○		○
		Under voltage trip		UVT	○		○		○
	Operating	Operating handle	Extended type	TFH	–		–		○
		Motor operator		MOT	○		○		–
		Padlock plate		PLD	○		○		–
		Extension handle		THA	○[3]		○[3]		○[3]
	Terminal	Terminal bus bar		TBB	○[4]		○[4]		○[4]
		Terminal cover		TCF	–		–		○[3]
		Interpole barrier		TQQ	○[3]		○[3]		○[3]
Durability (times)	Mechanical operation				10,000		10,000		10,000
	Electrical operation				3,000		3,000		3,000
Dimensions (mm) 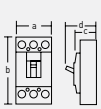	3/4P	a	Width		210/280	210/280	210/280	210/280	210
		b	Height		370	370	370	370	371
		c	Depth		110	200	110	200	151
		d			159	249	159	249	215
Weight (kg, breaker only)	3/4P				13/17	25/33	13.5/17.5	25.5/33.5	27

※ - The breaking capacity highlighted with blue and thick type is standard nominal value for each model in this catalogue.
1) (0.5-1): (0.63-0.8-1)x(0.8-0.85-0.9-0.95-1) 2) (0.4-1): (0.4-0.5-0.6-0.7-0.8-0.9-0.95-1)
3) Supplied as standard component
4) Supplied as standard component that attached in breaker

Rating Overview

| UPB type / 125-250AF |

Model					UPB100				UPB160				UPB250			
Figure																
Ampere frame size					125AF				160AF				250AF			
Number of poles (P)					3, 4				3, 4				3, 4			
Degree of protection (with terminal cover)					IP20				IP20				IP20			
Utilization category					A				A				A			
Suitability of isolation					○				○				○			
Protection					overload, inst., short-circuit				overload, inst., short-circuit				overload, inst., short-circuit			
Rating	Rated current (A)		Thermal magnetic type		15,16,20,25,30,32,40,50,60,63,75,80,100,125				100,125,160				125,150,160,175,200,225,250			
			Electronic type		50-125				63-160				100-250			
	Rated insulation voltage [Ui] (V)				AC750				AC750				AC750			
	Rated operational voltage [Ue] (V)				AC690				AC690				AC690			
					DC500[1]				DC500[1]				DC500[1]			
	Rated impulse withstand voltage [Uimp] (kV)				8				8				8			
Rated short-circuit breaking capacity IEC 60947-2 K 60947-2	Ultimate [Icu] (kA r.m.s.)	Recognition code for order			S	H	L	X	S	H	L	X	S	H	L	X
		AC660/690V, 50-60Hz			10	10	25	25	10	10	25	25	10	10	25	25
		AC480/500V, 50-60Hz			50	65	85	85	50	65	85	85	50	65	85	85
		AC440/460V, 50-60Hz			65	85	100	150	65	85	100	150	65	85	100	150
		AC380/415V, 50-60Hz			**85**	**100**	**130**	**150**	**85**	**100**	**130**	**150**	**85**	**100**	**130**	**150**
		AC220/240V, 50-60Hz			100	130	150	200	100	130	150	200	100	130	150	200
		DC250V			50[1]	65[1]	85[1]	100[1]	50[1]	65[1]	85[1]	100[1]	50[1]	65[1]	85[1]	100[1]
		DC125V			65[1]	100[1]	100[1]	100[1]	65[1]	100[1]	100[1]	100[1]	65[1]	100[1]	100[1]	100[1]
	Service [Ics]	% of [Icu]			100				100				100			
Trip mechanism & Protection characteristics	Thermal magnetic	Fixed thermal, Fixed instantaneous			○[2]				○[2]				○[2]			
		Adjustable thermal, Fixed inst.			○[2]				○[2]				○[2]			
		Adjustable thermal, Adjustable inst.			–				○[2]				○[2]			
	Electronic	LTD, STD, INST			○[2]				○[2]				○[2]			
		PTA, Pick-up LED			○				○				○			
Mounting	Direct mounting by screw				○				○				○			
	Plug-in	for Switchboard	Both line & load side		○[3]				○[3]				○[3]			
			Line side only		○[3]				○[3]				○[3]			
Terminal connection	Screw				○				○				○			
	Bus bar				○				○				○			
Accessories	Signal	Auxiliary switch		AUX	○				○				○			
		Trip alarm switch		ALT	○				○				○			
		Shunt trip		SHT	○				○				○			
		Under voltage trip		UVT	○				○				○			
	Operating	Operating handle	Surface type	TFG	○				○				○			
			Extended type	TFH	○				○				○			
		Motor operator		MOT	○				○				○			
		Mechanical interlock		MIF	○				○				○			
		Padlock plate		PLD	○				○				○			
	Mounting	Plug-in mounting base		TDM	○[3]				○[3]				○[3]			
	Terminal	Terminal bus bar		TBB	○				○				○			
		Cage terminal block		CTB	○				○				○			
		Terminal cover		TCF	○				○				○			
		Interpole barrier		TQQ	○[4]				○[4]				○[4]			
Durability (times)	Mechanical operation				25,000				25,000				25,000			
	Electrical operation				10,000				10,000				10,000			
Dimensions (mm)	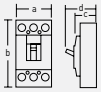	3/4P	a	Width	105/140				105/140				105/140			
			b	Height	165				165				165			
			c	Depth	86.5				86.5				86.5			
			d		112				112				112			
Weight (kg, breaker only)	3/4P				1.8/2.2				2.0/2.4				2.0/2.4			

※ - The breaking capacity highlighted with blue and thick type is standard nominal value for each model in this catalogue.

1) DC is not applicable for electronic breaker.

2) For the detail protection characteristics, please refer to following pages; · UPB100: page 90 · UPB160: page 96 · UPB250: page 100

3) Available for 3P breaker 4) Supplied as standard component

| UPB type / 400-630AF |

Model					UPB400				UPB630			
Figure												
Ampere frame size					400AF				630AF			
Number of poles (P)					3, 4				3, 4			
Degree of protection (with terminal cover)					IP20				IP20			
Utilization category					A				A			
Suitability of isolation					○				○			
Protection					overload, inst., short-circuit				overload, inst., short-circuit			
Rating	Rated current (A)				200-400				320-630			
	Rated insulation voltage [Ui] (V)				AC750				AC750			
	Rated operational voltage [Ue] (V)				AC690				AC690			
	Rated impulse withstand voltage [Uimp] (kV)				8				8			
Rated short-circuit breaking capacity IEC 60947-2 K 60947-2	Ultimate [Icu] (kA r.m.s.)	Recognition code for order			S	H	L	X	S	H	L	X
		AC660/690V, 50-60Hz			10	10	25	25	10	10	25	25
		AC480/500V, 50-60Hz			50	65	85	85	50	65	85	85
		AC440/460V, 50-60Hz			65	85	100	150	65	85	100	150
		AC380/415V, 50-60Hz			**85**	**100**	**130**	**150**	**85**	**100**	**130**	**150**
		AC220/240V, 50-60Hz			100	130	150	200	100	130	150	200
	Service [Ics]	% of [Icu]			100				100			
Trip mechanism & Protection characteristics	Electronic	LTD, STD, INST			○[1]				○[1]			
		GFT, I^2T lamp			○[1]				○[1]			
		PTA, Pick-up LED			○				○			
Mounting	Direct mounting by screw				○				○			
	Plug-in	for Switchboard	Both line & load side		○[2]				○[2]			
			Line side only		○[2]				○[2]			
Terminal connection		Screw			○				○			
		Bus bar			○				○			
Accessories	Signal	Auxiliary switch		AUX	○				○			
		Trip alarm switch		ALT	○				○			
		Shunt trip		SHT	○				○			
		Under voltage trip		UVT	○				○			
	Operating	Operating handle	Surface type	TFG	○				○			
			Extended type	TFH	○				○			
		Motor operator		MOT	○				○			
		Mechanical interlock		MIF	○				○			
		Padlock plate		PLD	○				○			
		Extension handle		THA	○[3]				○[3]			
	Mounting	Plug-in mounting base		TDM	○[2]				○[2]			
	Terminal	Terminal bus bar		TBB	○				○			
		Cage terminal block		CTB	○				○			
		Terminal cover		TCF	○				○			
		Interpole barrier		TQQ	○[3]				○[3]			
Durability (times)	Mechanical operation				20,000				20,000			
	Electrical operation				6,000				6,000			
Dimensions (mm) 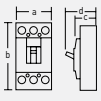	3/4P	a	Width		140/185				140/185			
		b	Height		255				255			
		c	Depth		117				117			
		d			159.5				159.5			
Weight (kg, breaker only)	3/4P				6.0/7.8				6.0/7.8			

※ - The breaking capacity highlighted with blue and thick type is standard nominal value for each model in this catalogue.
1) For the detail protection characteristics, please refer to following pages; · UPB400: page 106 · UPB630: page 108
2) Available for 3P breaker 3) Supplied as standard component

Rating Overview

| Motor protection / UPB type 125-250AF |

Model					UPB100		UPB250	
Figure								
Ampere frame size					125AF		250AF	
Number of poles (P)					3		3	
Degree of protection (with terminal cover)					IP20		IP20	
Utilization category					A		A	
Suitability of isolation					○		○	
Protection					instantaneous, short-circuit		instantaneous, short-circuit	
Rating	Rated current (A)				2.5, 3.2, 6.3, 12.5, 20, 32, 50, 63, 80, 100		125, 150, 175, 200, 225	
	Rated insulation voltage [Ui] (V)				AC750		AC750	
	Rated operational voltage [Ue] (V)				AC690		AC690	
					DC500		DC500	
	Rated impulse withstand voltage [Uimp] (kV)				8		8	
Rated short-circuit breaking capacity IEC 60947-2 K 60947-2	Ultimate [Icu] (kA r.m.s.)	Recognition code for order			H	L	H	L
		AC660/690V, 50-60Hz			10	25	10	25
		AC480/500V, 50-60Hz			65	85	65	85
		AC440/460V, 50-60Hz			85	100	85	100
		AC380/415V, 50-60Hz			100	130	100	130
		AC220/240V, 50-60Hz			130	150	130	150
		DC250V			65	85	65	85
		DC125V			100	100	100	100
	Service [Ics]	% of [Icu]			100		100	
Trip mechanism & Protection characteristics	Thermal magnetic	Adjustable instantaneous			(6-7-8-9-10-11-12-13)×In		(5-6-7-8-9-10)×In	
Mounting	Direct mounting by screw				○		○	
	Plug-in	for Switchboard	Both line & load side		○		○	
			Line side only		○		○	
Terminal connection		Screw			○		○	
		Bus bar			○		○	
Accessories	Signal	Auxiliary switch		AUX	○		○	
		Trip alarm switch		ALT	○		○	
		Shunt trip		SHT	○		○	
		Under voltage trip		UVT	○		○	
	Operating	Operating handle	Surface type	TFG	○		○	
			Extended type	TFH	○		○	
		Motor operator		MOT	○		○	
		Mechanical interlock		MIF	○		○	
		Padlock plate		PLD	○		○	
	Mounting	Plug-in mounting base		TDM	○		○	
	Terminal	Terminal bus bar		TBB	○		○	
		Cage terminal block		CTB	○		○	
		Terminal cover		TCF	○		○	
		Interpole barrier		TQQ	○[1]		○[1]	
Durability (times)	Mechanical operation				25,000		25,000	
	Electrical operation				10,000		10,000	
Dimensions (mm) 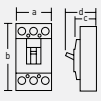	3P	a		Width	105		105	
		b		Height	165		165	
		c		Depth	86.5		86.5	
		d			112		112	
Weight (kg, breaker only)	3P				1.8		2.0	

※ - The breaking capacity highlighted with blue and thick type is standard nominal value for each model in this catalogue.
1) Supplied as standard component

| Q-class (for nuclear power plant application) / HBL type 100-225AF |

Model					HBL103				HBL203			
Figure												
Ampere frame size					100AF				225AF			
Number of poles (P)					3				3			
Degree of protection (with terminal cover)					IP20				IP20			
Utilization category					A				A			
Suitability of isolation					○				○			
Protection					overload, inst., short-circuit		instantaneous, short-circuit		overload, inst., short-circuit		instantaneous, short-circuit	
Rating	Rated current (A)				15, 20, 30, 40, 50, 60, 75, 100		2.5, 3.2, 6.3, 12.5, 20, 32, 50, 63, 80, 100		125, 150, 175, 200, 225			
	Rated insulation voltage [Ui] (V)				AC750				AC750			
	Rated operational voltage [Ue] (V)				AC690				AC690			
					DC500				DC500			
	Rated impulse withstand voltage [Uimp] (kV)				8				8			
Recognition code for order					U[1]	UQ[1]	UM[1]	UMQ[1]	U[1]	UQ[1]	UM[1]	UMQ[1]
Rated short-circuit breaking capacity IEC 60947-2 K 60947-2	Ultimate [Icu] (kA r.m.s.)	AC660/690V, 50-60Hz			25	25	25	25	25	25	25	25
		AC480/500V, 50-60Hz			85	85	85	85	85	85	85	85
		AC440/460V, 50-60Hz			100	100	100	100	100	100	100	100
		AC380/415V, 50-60Hz			150	150	150	150	150	150	150	150
		AC220/240V, 50-60Hz			200	200	200	200	200	200	200	200
		DC250V			100	100	100	100	100	100	100	100
		DC125V			100	100	100	100	100	100	100	100
	Service [Ics]	% of [Icu]			100				100			
Trip mechanism & Protection characteristics	Thermal magnetic	Fixed thermal,			○		–		○		–	
		Fixed instantaneous		INST	10×In		–		10×In		–	
		Adjustable instantaneous			–		(6-7-8-9-10-11-12-13)×In		–		(5-6-7-8-9-10)×In	
Q-class	Non-E1				○	–	○	–	○	–	○	–
	E1				–	○	–	○	–	○	–	○
Mounting	Direct mounting by screw				○				○			
Terminal connection	Screw				○				○			
	Bus bar				○				○			
Accessories	Signal	Auxiliary switch		AUX	○[2]				○[2]			
		Trip alarm switch		ALT	○[2]				○[2]			
		Shunt trip		SHT	○[2]				○[2]			
		Under voltage trip		UVT	○[2]				○[2]			
	Operating	Operating handle	Surface type	TFG	○				○			
		Motor operator		MOT	○				○			
		Mechanical interlock		MIF	○				○			
		Padlock plate		PLD	○				○			
	Mounting	Plug-in mounting base		TDM	○				○			
	Terminal	Terminal bus bar		TBB	○				○			
		Cage terminal block		CTB	○				○			
		Terminal cover		TCF	○[3]				○[3]			
		Interpole barrier		TQQ	○[3]				○[3]			
Durability (times)	Mechanical operation				25,000				25,000			
	Electrical operation				10,000				10,000			
Dimensions (mm)	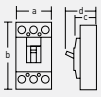	3P	a	Width	105				105			
			b	Height	165				165			
			c	Depth	86.5				86.5			
			d		112				112			
Weight (kg, breaker only)	3P				1.8				2.0			

※ - The breaking capacity highlighted with blue and thick type is standard nominal value for each model in this catalogue.
1) · U: non-E1 class · UQ: E1 class · UM: non-E1 class, motor protection · UMQ: E1 class, motor protection
2) Signal accessories shall be installed in breaker before ex-working. 3) Supplied as standard component

Rating Overview

| Switch disconnector / UAD type 50-100AF |

Model					UAD50C	UAD50S	UAD100R
Figure							
Ampere frame size					50AF		100AF
Number of poles (P)					3	3	3
Degree of protection (with terminal cover)					IP20	IP20	IP20
Utilization category					A	A	A
Suitability of isolation					○	○	○
Rating	Conventional thermal current [Ith] (A)				50	50	100
	Rated current (A)				50	50	100
	Rated insulation voltage [Ui] (V)				AC690	AC690	AC690
	Rated operational voltage [Ue] (V)				AC660	AC660	AC660
					DC250	DC250	DC250
	Rated impulse withstand voltage [Uimp] (kV)				6	6	6
	Rated short-circuit making capacity [Icm] (kA peak at AC460V)				17	52.5	52.5
	Rated short-time withstand current for 1sec. [Icw] (kA r.m.s.)				1	1	1
Durability	Mechanical operation (times)				25,000	25,000	25,000
	Electrical operation (times)				15,000	15,000	10,000
Mounting	Direct mounting by screw				○	○	○
	Plug-in	for Switchboard	Both line & load side		○	○	○
			Line side only		○	○	○
		for Distribution board			○	○	○
	DIN-rail	with DIN-rail adaptor			–	○	○
Terminal connection		Screw			○	○	○
Accessories	Signal	Auxiliary switch		AUX	○	○	○
		Trip alarm switch		ALT	○	○	○
		Shunt trip		SHT	○	○	○
		Under voltage trip		UVT	○	○	○
	Operating	Operating handle	Surface type	TFG	○	○	○
			Extended type	TFH	○	○	○
		Motor operator		MOT	○	○	○
		Mechanical interlock		MIF	○	○	○
		Padlock plate		PLD	○	○	○
	Mounting	DIN-rail adaptor		DRA	–	○	○
		Plug-in mounting base		TDM	○	○	○
	Terminal	Terminal cover		TCF	○	○	○
		Interpole barrier		TQQ	○ 1)	○ 1)	○ 1)
Dimensions (mm) 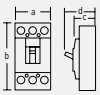		3P	a	Width	75	75	75
			b	Height	130	130	130
			c	Depth	60	60	60
			d		82	82	82
Weight (kg, breaker only)		3P			0.65	0.78	0.78

※ 1) Supplied as standard component

| Switch disconnector / UCD type 50-250AF |

Model					UCD50H	UCD100S	UCD100H	UCD160H	UCD250S	UCD250H
Figure										
Ampere frame size					50AF	100AF	125AF	160AF	250AF	
Number of poles (P)					3	3	3	3	3	3
Degree of protection (with terminal cover)					IP20	IP20	IP20	IP20	IP20	IP20
Utilization category					A	A	A	A	A	A
Suitability of isolation					○	○	○	○	○	○
Rating	Conventional thermal current [Ith] (A)				50	100	125	160	250	250
	Rated current (A)				50	100	125	160	250	250
	Rated insulation voltage [Ui] (V)				AC690	AC690	AC690	AC690	AC690	AC690
	Rated operational voltage [Ue] (V)				AC660	AC660	AC660	AC660	AC660	AC660
					DC250	DC250	DC250	DC250	DC250	DC250
	Rated impulse withstand voltage [Uimp] (kV)				6	6	6	6	6	6
	Rated short-circuit making capacity [Icm] (kA peak at AC460V)				105	73.5	105	105	73.5	105
	Rated short-time withstand current for 1sec. [Icw] (kA r.m.s.)				1	1	1	2	2	2
Durability	Mechanical operation (times)				25,000	25,000	25,000	25,000	25,000	25,000
	Electrical operation (times)				10,000	10,000	10,000	10,000	10,000	10,000
Mounting	Direct mounting by screw				○	○	○	○	○	○
	Plug-in	for Switchboard	Both line & load side		○	○	○	○	○	○
			Line side only		○	○	○	○	○	○
		for Distribution board			○	○	○	○	○	○
Terminal connection	Screw				○	○	○	○	○	○
	Bus bar				–	–	–	○	○	○
Accessories	Signal	Auxiliary switch		AUX	○	○	○	○	○	○
		Trip alarm switch		ALT	○	○	○	○	○	○
		Shunt trip		SHT	○	○	○	○	○	○
		Under voltage trip		UVT	○	○	○	○	○	○
	Operating	Operating handle	Surface type	TFG	○	○	○	○	○	○
			Extended type	TFH	○	○	○	○	○	○
		Motor operator		MOT	○	○	○	○	○	○
		Mechanical interlock		MIF	○	○	○	○	○	○
		Padlock plate		PLD	○	○	○	○	○	○
	Mounting	Plug-in mounting base		TDM	–	○	○	○	○	○
	Terminal	Cage terminal block		CTB	○	○	○	○	○	○
		Terminal cover		TCF	○	○	○	○	○	○
		Interpole barrier		TQQ	○[1]	○[1]	○[1]	○[1]	○[1]	○[1]
Dimensions (mm) 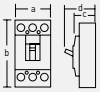	3P	a	Width		90	90	90	105	105	105
		b	Height		155	155	155	165	164	165
		c	Depth		60	60	60	60	60	60
		d			84.5	84.5	84.5	84.5	84	84.5
Weight (kg, breaker only)	3P				1	1	1	1.3	1.2	1.3

※ 1) Supplied as standard component

Rating Overview

| Switch disconnector / UCD type 400-1250AF |

Model					UCD400S	UCD630S	UCD800S	UCD1000S	UCD1250S
Figure									
Ampere frame size					400AF	630AF	800AF	1000AF	1250AF
Number of poles (P)					3	3	3	3	3
Degree of protection (with terminal cover)					IP20	IP20	IP20	IP20[1]	IP20[1]
Utilization category					A	A	A	A	A
Suitability of isolation					○	○	○	○	○
Rating	Conventional thermal current [Ith] (A)				400	630	800	1,000	1,250
	Rated current (A)				400	630	800	1,000	1,250
	Rated insulation voltage [Ui] (V)				AC690	AC690	AC690	AC750	AC750
	Rated operational voltage [Ue] (V)				AC660	AC660	AC660	AC690	AC690
					DC250	DC250	DC250	–	–
	Rated impulse withstand voltage [Uimp] (kV)				6	6	6	8	8
	Rated short-circuit making capacity [Icm] (kA peak at AC460V)				187	187	187	165	165
	Rated short-time withstand current for 1sec. [Icw] (kA r.m.s.)				4	6.3	8	10	12.5
Durability	Mechanical operation (times)				20,000	20,000	10,000	10,000	10,000
	Electrical operation (times)				6,000	6,000	3,000	3,000	3,000
Mounting	Direct mounting by screw				○	○	○	–	–
	Plug-in	for Switchboard	Both line & load side		○	○	○	–	–
			Line side only		○	○	○	–	–
Terminal connection	Screw				○	○	○	–	–
	Bus bar				○	○	○	○	○
Accessories	Signal	Auxiliary switch		AUX	○	○	○	○	○
		Trip alarm switch		ALT	○	○	○	○	○
		Shunt trip		SHT	○	○	○	○	○
		Under voltage trip		UVT	○	○	○	○	○
	Operating	Operating handle	Surface type	TFG	○	○	○	–	–
			Extended type	TFH	○	○	○	–	–
		Motor operator		MOT	○	○	○	○	○
		Mechanical interlock		MIF	○	○	○	–	–
		Padlock plate		PLD	○	○	○	○	○
		Extension handle		THA	○[2]	○[2]	○[2]	○[2]	○[2]
	Mounting	Plug-in mounting base		TDM	○	○	○	–	–
	Terminal	Terminal bus bar		TBB	○	○	○	○[3]	○[3]
		Cage terminal block		CTB	○	○	○	–	–
		Terminal cover		TCF	○	○	○	–	–
		Interpole barrier		TQQ	○[2]	○[2]	○[2]	○[2]	○[2]
Dimensions (mm) 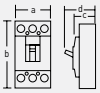	3P	a	Width		140	210	210	210	210
		b	Height		257	280	280	370	370
		c	Depth		110	110	110	110	110
		d			145	145	145	159	159
Weight (kg, breaker only)	3P				4.5	9.5	9.5	13	13.5

※ 1) Without terminal bus bar 2) Supplied as standard component
3) Supplied as standard component that attached in breaker

| Switch disconnector / UPD type 125-630AF |

Model					UPD100S	UPD160S	UPD250S	UPD400S	UPD630S
Figure									
Ampere frame size					125AF	160AF	250AF	400AF	630AF
Number of poles (P)					3	3	3	3	3
Degree of protection (with terminal cover)					IP20	IP20	IP20	IP20	IP20
Utilization category					A	A	A	A	A
Suitability of isolation					○	○	○	○	○
Rating	Conventional thermal current [Ith] (A)				125	160	250	400	630
	Rated current (A)				125	160	250	400	630
	Rated insulation voltage [Ui] (V)				AC750	AC750	AC750	AC750	AC750
	Rated operational voltage [Ue] (V)				AC690	AC690	AC690	AC690	AC690
					DC500	DC500	DC500	–	–
	Rated impulse withstand voltage [Uimp] (kV)				8	8	8	8	8
	Rated short-circuit making capacity [Icm] (kA peak at AC460V)				200	200	200	200	200
	Rated short-time withstand current for 1sec. [Icw] (kA r.m.s.)				1	1.6	2.5	4	6.3
Durability	Mechanical operation (times)				25,000	25,000	25,000	20,000	20,000
	Electrical operation (times)				10,000	10,000	10,000	6,000	6,000
Mounting	Direct mounting by screw				○	○	○	○	○
	Plug-in	for Switchboard	Both line & load side		○	○	○	○	○
			Line side only		○	○	○	○	○
Terminal connection		Screw			○	○	○	○	○
		Bus bar			○	○	○	○	○
Accessories	Signal	Auxiliary switch		AUX	○	○	○	○	○
		Trip alarm switch		ALT	○	○	○	○	○
		Shunt trip		SHT	○	○	○	○	○
		Under voltage trip		UVT	○	○	○	○	○
	Operating	Operating handle	Surface type	TFG	○	○	○	○	○
			Extended type	TFH	○	○	○	○	○
		Motor operator		MOT	○	○	○	○	○
		Mechanical interlock		MIF	○	○	○	○	○
		Padlock plate		PLD	○	○	○	–	–
		Extension handle		THA	–	–	–	○ [1]	○ [1]
	Mounting	Plug-in mounting base		TDM	○	○	○	○	○
	Terminal	Terminal bus bar		TBB	○	○	○	○	○
		Cage terminal block		CTB	○	○	○	○	○
		Terminal cover		TCF	○	○	○	○	○
		Interpole barrier		TQQ	○ [1]	○ [1]	○ [1]	○ [1]	○ [1]
Dimensions (mm) 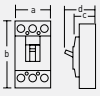	3P	a	Width		105	105	105	140	140
		b	Height		165	165	165	255	255
		c	Depth		86.5	86.5	86.5	117	117
		d			112	112	112	159.5	159.5
Weight (kg, breaker only)	3P				1.8	2	2	6	6

※ 1) Supplied as standard component

Rating Overview

| Miniature type / Molded case circuit breaker 30-100AF |

Model				UMB30				UMB50		UDB30		UDB50		UDB100	
Figure															
Ampere frame size				30AF				50AF		30AF		50AF		100AF	
Number of poles (P)				2				2		2, 3		2, 3		∗2,3	
Degree of protection				IP20				IP20		IP20		IP20		IP20	
Utilization category				A				A		A		A		A	
Protection				overload, short-circuit				overload, short-circuit		overload, short-circuit		overload, short-circuit		overload, short-circuit	
Rating	Rated current (A)			15, 20, 30				15, 20, 30, 40, 50		3[1], 5, 10, 15, 20, 30		5, 10, 15, 20, 30, 40, 50		15, 20, 30, 40, 50, 60, 75, 100	
	Rated insulation voltage [Ui] (V)			AC250				AC250		AC460		AC460		AC460	
	Rated operational voltage [Ue] (V)			AC220				AC220		2P: AC220 3P: AC220/460		2P: AC220 3P: AC220/460		2P: AC220 3P: AC220/460	
	Rated impulse withstand voltage [Uimp] (kV)			6				6		6		6		6	
Rated short-circuit breaking capacity IEC 60947-2 K 60947-2	Ultimate [Icu] (kA r.m.s.)	Recognition code for order		Ra	Rb	Sg	Hg	Sg	Hg	S	H	S	H	S	H
		AC440/460V, 50-60Hz		–				–		2.5	5-10A: 2.5[3] 15-30A: 5	2.5	5-10A: 2.5[3] 15-30A: 5	2.5	5
		AC380/415V, 50-60Hz		–				–		2.5	5-10A: 2.5[3] 15-30A: 5	2.55	5-10A: 2.5[3] 15-30A: 5	2.5	5
		AC220/240V, 50-60Hz		2.5		5	10	5	10	5	5-10A: 5[3] 15-30A: 10	5	5-10A: 5[3] 15-30A: 10	5	10
	Service [Ics]	% of [Icu]		50				50		50		50		50	
Trip mechanism	Hydraulic magnetic			–	–	–	○	–	○	○		○		○	
	Thermal magnetic			○	○	○	–	○	–	–		–		–	
Mounting		Direct mounting by screw		–				–		○		○		○	
		DIN-rail		○				○		○		○		○	
Terminal connection		Screw		○				○		○		○		○	
Accessories	Signal	Auxiliary switch	AUX	–				–		○		○		○	
		Trip alarm switch	ALT	–				–		○		○		○	
		Shunt trip	SHT	–				–		○		○		○	
	Terminal	Interpole barrier	TQQ	–				–		○		○		○	
Dimensions (mm) 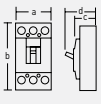	2/3P	a	Width	33		35		35		50/75		50/75		75[2]/75	
		b	Height	70		80		80		96		96		96	
		c	Depth	42	60	60		60		60		60		60	
		d		57	75	76		76		80		80		80	
Weight (kg, breaker only)	2/3P			0.1	0.12	0.13		0.15		0.2/0.35		0.2/0.35		0.2/0.35	

※ - The breaking capacity highlighted with blue and thick type is standard nominal value for each model in this catalogue.
1] 3A is not applicable for UDB30H. 2] ∗2P breaker has same dimension as 3P breaker, but the middle pole is removed.
3] It is breaking capacity under 10A.

| Miniature type / Earth leakage circuit breaker 30-100AF |

Model				UMG30				UMG50		UDG30		UDG50		UDG100	
Figure															
Ampere frame size				30AF				50AF		30AF		50AF		100AF	
Number of poles (P)				2				2		2, 3		2, 3		∗2,3	
Degree of protection				IP20				IP20		IP20		IP20		IP20	
Utilization category				A				A		A		A		A	
Protection				earth leakage, overload, short-circuit				earth leakage, overload, short-circuit		earth leakage, overload, short-circuit		earth leakage, overload, short-circuit		earth leakage, overload, short-circuit	
Rating	Rated current (A)			15, 20, 30				15, 20, 30, 40, 50		3[1], 5, 10, 15, 20, 30		5, 10, 15, 20, 30, 40, 50		15, 20, 30, 40, 50, 60, 75, 100	
	Rated residual current [I△n] (mA)			15, 30				15, 30		15, 30		15, 30		30, 100	
	Rated insulation voltage [Ui] (V)			AC250				AC250		AC460		AC460		AC460	
	Rated operational voltage [Ue] (V)			AC220				AC220		2P: AC220 3P: AC220/460		2P: AC220 3P: AC220/460		2P: AC220 3P: AC220/460	
	Rated impulse withstand voltage [Uimp] (kV)			6				6		6		6		6	
	Rated operating time (sec.)			0.03				0.03		0.03		0.03		0.03	
Rated short-circuit breaking capacity IEC 60947-2 K 60947-2	Ultimate [Icu] (kA r.m.s.)	Recognition code for order		Ca(Cb)	Ra(Rb)	Co(Rd)	Sg(Hg)	Sg	Hg	S	H	S	H	S	H
		AC440/460V, 50-60Hz		–				–		2.5	5-10A: 2.5 15-30A: 5	2.5	5-10A: 2.5 15-30A: 5	2.5	5
		AC380/415V, 50-60Hz		–				–		2.5	5-10A: 2.5 15-30A: 5	2.5	5-10A: 2.5 15-30A: 5	2.5	5
		AC220/240V, 50-60Hz		1.5	2.5	1.5(2.5)	5(10)	5	10	5	5-10A: 5 15-30A: 10	5	5-10A: 5 15-30A: 10	5	10
	Service [Ics]	% of [Icu]		50				50		50		50		50	
Earth leakage protection	Earth leakage detection			by current transformer				by current transformer		by current transformer		by current transformer		by current transformer	
	Earth leakage test button			○				○		○		○		○	
	Earth leakage indicator			–				–		○		○		○	
Trip mechanism	Hydraulic magnetic			–			–(○)	–	○	○		○		○	
	Thermal magnetic			○			○(–)	○	–	–		–		–	
Mounting		Direct mounting by screw		–		○	–	–		○		○		○	
		DIN-rail		○		–	○	○		○		○		○	
Terminal connection		Screw		○				○		○		○		○	
Accessories	Signal	Auxiliary switch	AUX	–				–		○		○		○	
		Trip alarm switch	ALT	–				–		○		○		○	
	Terminal	Interpole barrier	TQQ	–				–		○		○		○	
Dimensions (mm) 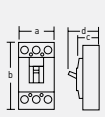	2/3P	a	Width	33	33	62	35	35		50/75		50/75		75[2]/75	
		b	Height	70	70	82	80	80		96		96		96	
		c	Depth	42(60)	42(60)	42	60	60		60		60		60	
		d		57(76)	57(76)	58	76	76		80		80		80	
Weight (kg, breaker only)	2/3P			0.1(0.12)	0.1(0.12)	0.21	0.13(0.15)	0.13/0.15		0.33/0.44		0.33/0.44		0.46/0.63	

※ - KS certified products. English nameplate and 50Hz marking are not available.
- The breaking capacity highlighted with blue and thick type is standard nominal value for each model in this catalogue.
1) 3A is not applicable for UDG30H. 2) ∗2P breaker has same dimension as 3P breaker, but the middle pole is removed.



Specifications and Standard Order Codes

Specifications and Standard Order Codes

| UAB type / 30AF |

- UAB30C 7.5/5kA
- UAB30R 14/10kA

					UAB30C	UAB30R
						
Number of poles (P)					2, 3	
Degree of protection (with terminal cover)					IP20	
Utilization category					A	
Suitability of isolation					○	
Protection					overload, inst., short-circuit	
Rating	Rated current (A)				3,5,10,15,20,30	5,10,15,20,30
	Rated insulation voltage [Ui] (V)				AC690	
	Rated operational voltage [Ue] (V)				AC660	
	Rated impulse withstand voltage [Uimp] (kV)				6	
Rated short-circuit breaking capacity IEC 60947-2 K 60947-2	Ultimate [Icu] (kA r.m.s.)	AC600/660V, 50-60Hz			2.5	5
		AC480/500V, 50-60Hz			2.5	7.5
		AC440/460V, 50-60Hz			5	10
		AC380/415V, 50-60Hz			7.5/5	14/10
		AC220/240V, 50-60Hz			10	25
	Service [Ics]	% of [Icu]			50	
Trip mechanism & Protection characteristics	Hydraulic magnetic	Fixed thermal, Fixed instantaneous			○	
				INST	12×In	
Mounting	Direct mounting by screw				○	
	Plug-in	for Switchboard	Both line & load side		○[1]	
			Line side only		○[1]	
		for Distribution board			○[1]	
Terminal connection		Screw			○	
Durability (times)	Mechanical operation				25,000	
	Electrical operation				15,000	
Dimensions (mm) 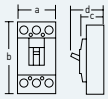		2/3P	a	Width	50/75	
			b	Height	130	
			c	Depth	60	
			d		82	
Weight (kg, breaker only)		2/3P			0.45/0.65	

※ - The breaking capacity highlighted with blue and thick type is standard nominal value for each model in this catalogue.
1) Available for 3P breaker

▪ Accessories

• Signal

Auxiliary switch	1C, right-hand-side	2C, right-hand-side				
	AUX 10A R1	AUX 10A R2				
Trip alarm switch	1C, right-hand-side					
	ALT 10A R1					
Shunt trip[1]	DC24V	DC100-110V	AC100-120V	AC200-230V	AC380-415V	AC440-480V
	SHT 10A A	SHT 10A C	SHT 10A F	SHT 10A H		
Under voltage trip[2]	DC24V	DC100-110V	AC100-120V	AC200-230V	AC380-415V	AC440-480V
	*UVT 10A J	*UVT 10A L	*UVT 10A N	*UVT 10A P	*UVT 10A Q	*UVT 10A R

※ 1] The permissible operating voltage: 85-110% of rated voltage for AC , 75-125% for DC
2] The permissible operating voltage: 85-110% of rated voltage(AC), 85-125% of rated voltage(DC)
The tripping voltage: 20-70% of rated voltage(AC/DC)
Be sure not to use UVT for the electrical interlock system.
*Reset is possible without power.

• Operating

Operating handle[1]	Power supply direction		Upper	Right	Left
	Surface	S type	TFG 10AS U4	TFG 10AS R4	TFG 10AS L4
		L type	TFG 10AL U4	–	TFG 10AL L4
	Extended	S type	TFH 10AS		
		L type	TFH 10AL		
Motor operator[2]			DC24V	AC/DC110V	AC/DC220V
			MOT 10A DC24	MOT 10A ADC110	MOT 10A ADC220
Mechanical interlock			2 pole	3 pole	
			–	MIF 10A 3	
Padlock plate[3]			PLD 10UA		

※ 1] Available for 3P breaker. For detail type information, please refer to page 195-203. 2] Motor operator is not recommended for marine application.
3] Padlock is not supplied.

• Mounting

Plug-in[1]	Structure		For both line & load side	For line side only
	Mounting base		TDM 10AP	TDM 10AF
	Connection block[2]	2C contact	CBM 10AB 2	–
		3C contact	CBM 10AB 3	–
	Conn. block barrier		CBM BARR	–

※ 1] Available for 3P breaker
2] Connection blocks are required for internal accessory installation in both line & load side plug-in type 3P breaker.

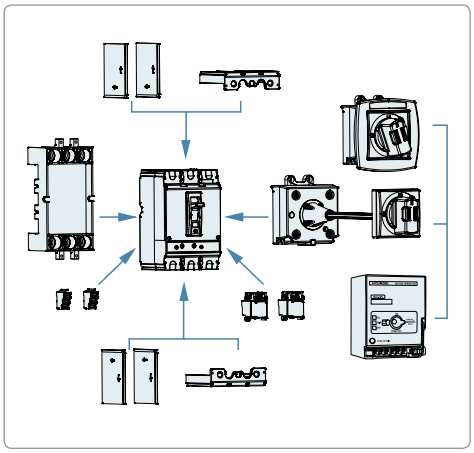

• Terminal

Cage terminal block		3EA/SET	
		CTB 10A 3S50	
Terminal cover[1]		2 pole	3 pole
		TCF 10AP 2	TCF 10AP 3
Interpole barrier[2]	2EA/SET	TQQ 10A 3PLINE	

※ 1] For both line and load side of breaker, 2EA shall be ordered.
2] Supplied as standard component
Required quantity for both line and load side of breaker: 2 pole 2EA, 3 pole 4EA

▪ Standard order code and unit

• Fixed thermal & fixed instantaneous / Hydraulic magnetic trip

40/45℃

Model / Breaking capacity at AC380/415V	Rated current	2 pole		3 pole		Specification	Category
		Code	Unit (EA)	Code	Unit (EA)		
UAB30C 7.5/5kA	3A	UAB30C 2PT4S0000C 00003	30	UAB30C 3PT4S0000C 00003	20	Screw type terminal connection, No option, 50/60Hz	MCCB /M1
	5A	UAB30C 2PT4S0000C 00005	30	UAB30C 3PT4S0000C 00005	20		
	10A	UAB30C 2PT4S0000C 00010	30	UAB30C 3PT4S0000C 00010	20		
	15A	UAB30C 2PT4S0000C 00015	30	UAB30C 3PT4S0000C 00015	20		
	20A	UAB30C 2PT4S0000C 00020	30	UAB30C 3PT4S0000C 00020	20		
	30A	UAB30C 2PT4S0000C 00030	30	UAB30C 3PT4S0000C 00030	20		
UAB30R 14/10kA	5A	UAB30R 2PT4S0000C 00005	30	UAB30R 3PT4S0000C 00005	20		
	10A	UAB30R 2PT4S0000C 00010	30	UAB30R 3PT4S0000C 00010	20		
	15A	UAB30R 2PT4S0000C 00015	30	UAB30R 3PT4S0000C 00015	20		
	20A	UAB30R 2PT4S0000C 00020	30	UAB30R 3PT4S0000C 00020	20		
	30A	UAB30R 2PT4S0000C 00030	30	UAB30R 3PT4S0000C 00030	20		

Specifications and Standard Order Codes

| UAB type / 50AF |

- UAB50C 7.5/5kA
- UAB50R 14/10kA

					UAB50C	UAB50R
						
Number of poles (P)					2, 3, 4	
Degree of protection (with terminal cover)					IP20	
Utilization category					A	
Suitability of isolation					○	
Protection					overload, inst., short-circuit	
Rating	Rated current (A)				5,10,15,20,30,40,50	
	Rated insulation voltage [Ui] (V)				AC690	
	Rated operational voltage [Ue] (V)				AC660	
	Rated impulse withstand voltage [Uimp] (kV)				6	
Rated short-circuit breaking capacity IEC 60947-2 K 60947-2	Ultimate [Icu] (kA r.m.s.)	AC600/660V, 50-60Hz			2.5	5
		AC480/500V, 50-60Hz			2.5	7.5
		AC440/460V, 50-60Hz			5	10
		AC380/415V, 50-60Hz			7.5/5	14/10
		AC220/240V, 50-60Hz			10	25
	Service [Ics]	% of [Icu]			50	
Trip mechanism & Protection characteristics	Hydraulic magnetic	Fixed thermal, Fixed instantaneous			○	
				INST	12×In	
Mounting	Direct mounting by screw				○	
	Plug-in	for Switchboard	Both line & load side		○[1]	
			Line side only		○[1]	
		for Distribution board			○[1]	
Terminal connection		Screw			○	
Durability (times)	Mechanical operation				25,000	
	Electrical operation				15,000	
Dimensions (mm)	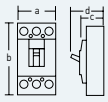	2/3/4P	a	Width	50/75/100	
			b	Height	130	
			c	Depth	60	
			d		82	
Weight (kg, breaker only)		2/3/4P			0.45/0.65/0.85	

※ - The breaking capacity highlighted with blue and thick type is standard nominal value for each model in this catalogue.
1] Available for 3P breaker

▪ Accessories

• Signal

Auxiliary switch	1C, right-hand-side	2C, right-hand-side				
	AUX 10A R1	AUX 10A R2				
Trip alarm switch	1C, right-hand-side					
	ALT 10A R1					
Shunt trip[1]	DC24V	DC100-110V	AC100-120V	AC200-230V	AC380-415V	AC440-480V
	SHT 10A A	SHT 10A C	SHT 10A F	SHT 10A H		
Under voltage trip[2]	DC24V	DC100-110V	AC100-120V	AC200-230V	AC380-415V	AC440-480V
	UVT 10A J	UVT 10A L	UVT 10A N	UVT 10A P	UVT 10A Q	UVT 10A R

※ 1] The permissible operating voltage: 85-110% of rated voltage for AC , 75-125% for DC
2] The permissible operating voltage: 85-110% of rated voltage(AC), 85-125% of rated voltage(DC)
The tripping voltage: 20-70% of rated voltage(AC/DC)
Be sure not to use UVT for the electrical interlock system.
∗Reset is possible without power.

• Operating

Operating handle[1]	Power supply direction		Upper	Right	Left
	Surface	S type	TFG 10AS U4	TFG 10AS R4	TFG 10AS L4
		L type	TFG 10AL U4	–	TFG 10AL L4
	Extended	S type	TFH 10AS		
		L type	TFH 10AL		
Motor operator[2]			DC24V	AC/DC110V	AC/DC220V
			MOT 10A DC24	MOT 10A ADC110	MOT 10A ADC220
Mechanical interlock			2 pole	3 pole	4 pole
			–	MIF 10A 3	MIF 10A 4
Padlock plate[3]			PLD 10UA		

※ 1] Available for 3P, 4P breaker. For detail type information, please refer to page 195-202. 2] Motor operator is not recommended for marine application.
3] Padlock is not supplied.

• Mounting

Plug-in[1]	Structure		For both line & load side	For line side only
	Mounting base		TDM 10AP	TDM 10AF
	Connection block[2]	2C contact	CBM 10AB 2	–
		3C contact	CBM 10AB 3	–
	Conn. block barrier		CBM BARR	–

※ 1] Available for 3P breaker
2] Connection blocks are required for internal accessory installation in both line & load side plug-in type 3P breaker.

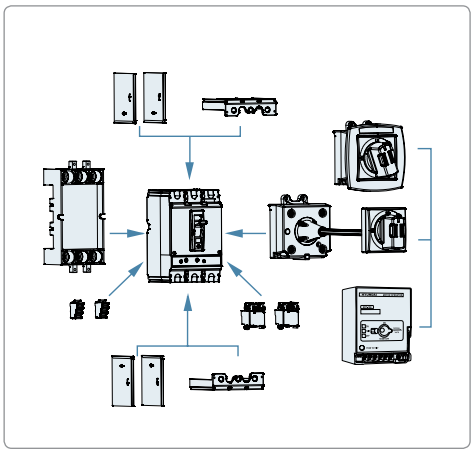

• Terminal

Cage terminal block		3EA/SET	4EA/SET	
		CTB 10A 3S50	CTB 10A 4S50	
Terminal cover[1]		2 pole	3 pole	4 pole
		TCF 10AP 2	TCF 10AP 3	TCF 10AP 4
Interpole barrier[2]	2EA/SET	TQQ 10A 3PLINE		

※ 1] For both line and load side of breaker, 2EA shall be ordered.
2] Supplied as standard component
Required quantity for both line and load side of breaker: 2 pole 2EA, 3 pole 4EA, 4 pole 6EA

▪ Standard order code and unit

• Fixed thermal & fixed instantaneous / Hydraulic magnetic trip

40/45℃

Model / Breaking capacity at AC380/415V	Rated current	2 pole		3 pole		4 pole		Specification	Category
		Code	Unit (EA)	Code	Unit (EA)	Code	Unit (EA)		
UAB50C 7.5/5kA	5A	UAB50C 2PT4S0000C 00005	30	UAB50C 3PT4S0000C 00005	20	UAB50C 4PT4S0000C 00005	16	Screw type terminal connection, No option, 50/60Hz	MCCB /M1
	10A	UAB50C 2PT4S0000C 00010	30	UAB50C 3PT4S0000C 00010	20	UAB50C 4PT4S0000C 00010	16		
	15A	UAB50C 2PT4S0000C 00015	30	UAB50C 3PT4S0000C 00015	20	UAB50C 4PT4S0000C 00015	16		
	20A	UAB50C 2PT4S0000C 00020	30	UAB50C 3PT4S0000C 00020	20	UAB50C 4PT4S0000C 00020	16		
	30A	UAB50C 2PT4S0000C 00030	30	UAB50C 3PT4S0000C 00030	20	UAB50C 4PT4S0000C 00030	16		
	40A	UAB50C 2PT4S0000C 00040	30	UAB50C 3PT4S0000C 00040	20	UAB50C 4PT4S0000C 00040	16		
	50A	UAB50C 2PT4S0000C 00050	30	UAB50C 3PT4S0000C 00050	20	UAB50C 4PT4S0000C 00050	16		
UAB50R 14/10kA	5A	UAB50R 2PT4S0000C 00005	30	UAB50R 3PT4S0000C 00005	20	UAB50R 4PT4S0000C 00005	16		
	10A	UAB50R 2PT4S0000C 00010	30	UAB50R 3PT4S0000C 00010	20	UAB50R 4PT4S0000C 00010	16		
	15A	UAB50R 2PT4S0000C 00015	30	UAB50R 3PT4S0000C 00015	20	UAB50R 4PT4S0000C 00015	16		
	20A	UAB50R 2PT4S0000C 00020	30	UAB50R 3PT4S0000C 00020	20	UAB50R 4PT4S0000C 00020	16		
	30A	UAB50R 2PT4S0000C 00030	30	UAB50R 3PT4S0000C 00030	20	UAB50R 4PT4S0000C 00030	16		
	40A	UAB50R 2PT4S0000C 00040	30	UAB50R 3PT4S0000C 00040	20	UAB50R 4PT4S0000C 00040	16		
	50A	UAB50R 2PT4S0000C 00050	30	UAB50R 3PT4S0000C 00050	20	UAB50R 4PT4S0000C 00050	16		

Specifications and Standard Order Codes

| UAB type / 50AF |

- UAB50S 25kA
- UAB50H 30kA

					UAB50S	UAB50H
						
Number of poles (P)					2, 3, 4	
Degree of protection (with terminal cover)					IP20	
Utilization category					A	
Suitability of isolation					○	
Protection					overload, inst., short-circuit	
Rating	Rated current (A)				15,16,20,25,30,32,40,50	
	Rated insulation voltage [Ui] (V)				AC690	
	Rated operational voltage [Ue] (V)				AC660	
					DC250	
	Rated impulse withstand voltage [Uimp] (kV)				6	
Rated short-circuit breaking capacity IEC 60947-2 K 60947-2	Ultimate [Icu] (kA r.m.s.)	AC600/660V, 50-60Hz			7.5	10
		AC480/500V, 50-60Hz			7.5	14
		AC440/460V, 50-60Hz			21	25
		AC380/415V, 50-60Hz			25	30
		AC220/240V, 50-60Hz			42	50
		DC250V			10	14
		DC125V			15	20
	Service [Ics]	% of [Icu]			25	
Trip mechanism & Protection characteristics	Thermal magnetic	Fixed thermal, Fixed instantaneous			○	
				INST	15-32A: 20×In, 40-100A: 10×In	
		Adjustable thermal, Fixed instantaneous		LTD	(0.8-0.9-1)×In [2]	
				INST	15-32A: 20×In, 40-100A: 10×In	
Mounting	Direct mounting by screw				○	
	Plug-in	for Switchboard	Both line & load side		○ [1]	
			Line side only		○ [1]	
		for Distribution board			○ [1]	
	DIN-rail	with DIN-rail adaptor			○	
Terminal connection		Screw			○	
Durability (times)	Mechanical operation				25,000	
	Electrical operation				15,000	
Dimensions (mm) 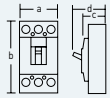		2/3/4P	a	Width	50/75/100	
			b	Height	130	
			c	Depth	60	
			d		82	
Weight (kg, breaker only)		2/3/4P			0.6/0.78/0.96	

※ - The breaking capacity highlighted with blue and thick type is standard nominal value for each model in this catalogue.
1] Available for 3P breaker 2] Available for 3P, 4P breaker

▪ Accessories

• Signal

Auxiliary switch	1C, right-hand-side	1C, left-hand-side				
	AUX 10UA R1	AUX 10UA L1				
Trip alarm switch	1C, right-hand-side	1C, left-hand-side				
	ALT 10UA R1	ALT 10UA L1				
Shunt trip[1]	DC24V	DC100-110V	AC100-120V	AC200-230V	AC380-415V	AC440-480V
	SHT 10UA A	–	SHT 10UA F	SHT 10UA H	SHT 10UA B	SHT 10UA D
Under voltage trip[2]	DC24V	DC100-110V	AC100-120V	AC200-230V	AC380-415V	AC440-480V
	UVT 10UA J	UVT 10UA L	UVT 10UA N	UVT 10UA P	UVT 10UA Q	UVT 10UA R

※ 1] The permissible operating voltage: 85-110% of rated voltage for AC , 75-125% for DC
2] The permissible operating voltage: 85-110% of rated voltage(AC), 85-125% of rated voltage(DC)
The tripping voltage: 20-70% of rated voltage(AC/DC)
Be sure not to use UVT for the electrical interlock system.

• Operating

Operating handle[1]	**Power supply direction**		Upper	Right	Left
	Surface	**S type**	TFG 10UAS U4	TFG 10UAS R4	TFG 10UAS L4
		L type	TFG 10UAL U4	–	TFG 10UAL L4
	Extended	**S type**	TFH 10UAS		
		L type	TFH 10UAL		
Motor operator[2]			DC24V	AC/DC110V	AC/DC220V
			MOT 10UA DC24	MOT 10UA ADC110	MOT 10UA ADC220
Mechanical interlock			2 pole	3 pole	4 pole
			–	MIF 10UA 3	MIF 10UA 4
Padlock plate[3]			PLD 10UA		

※ 1] Available for 3P, 4P breaker. For detail type information, please refer to page 195-202.
2] Motor operator is not recommended for marine application.
3] Padlock is not supplied.

• Mounting

DIN-rail adaptor			DRA 10UA	
Plug-in[1]	**Structure**		For both line & load side	For line side only
	Mounting base		TDM 10AP	TDM 10AF
	Connection block[2]	**2C contact**	CBM 10AB 2	–
		3C contact	CBM 10AB 3	–
	Conn. block barrier		CBM BARR	–

※ 1] Available for 3P breaker
2] Connection blocks are required for internal accessory installation in both line & load side plug-in type 3P breaker.

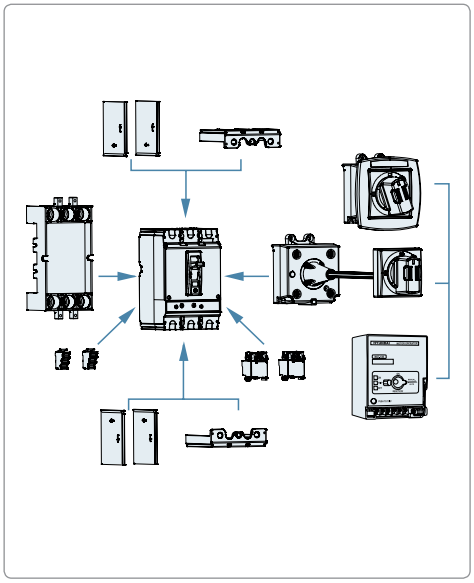

• Terminal

Cage terminal block		3EA/SET	4EA/SET	
		CTB 10A 3S50	CTB 10A 4S50	
Terminal cover[1]		2 pole	3 pole	4 pole
		TCF 10AP 2	TCF 10AP 3	TCF 10AP 4
Interpole barrier[2]	**2EA/SET**	TQQ 10A 3PLINE		

※ 1] For both line and load side of breaker, 2EA shall be ordered.
2] Supplied as standard component
Required quantity for both line and load side of breaker: 2 pole 2EA, 3 pole 4EA, 4 pole 6EA

Specifications and Standard Order Codes

▪ Standard order code and unit

• Fixed thermal & fixed instantaneous / Thermal magnetic trip

40/45℃

Model / Breaking capacity at AC380/415V	Rated current	2 pole		3 pole		4 pole		Specification	Category
		Code	Unit (EA)	Code	Unit (EA)	Code	Unit (EA)		
UAB50S 25kA	15A	UAB50S 2PT4S0000C 00015	30	UAB50S 3PT4S0000C 00015	20	UAB50S 4PT4S0000C 00015	16	Screw type terminal connection, No option, 50/60Hz	MCCB /M2
	16A	UAB50S 2PT4S0000C 00016	30	UAB50S 3PT4S0000C 00016	20	UAB50S 4PT4S0000C 00016	16		
	20A	UAB50S 2PT4S0000C 00020	30	UAB50S 3PT4S0000C 00020	20	UAB50S 4PT4S0000C 00020	16		
	25A	UAB50S 2PT4S0000C 00025	30	UAB50S 3PT4S0000C 00025	20	UAB50S 4PT4S0000C 00025	16		
	30A	UAB50S 2PT4S0000C 00030	30	UAB50S 3PT4S0000C 00030	20	UAB50S 4PT4S0000C 00030	16		
	32A	UAB50S 2PT4S0000C 00032	30	UAB50S 3PT4S0000C 00032	20	UAB50S 4PT4S0000C 00032	16		
	40A	UAB50S 2PT4S0000C 00040	30	UAB50S 3PT4S0000C 00040	20	UAB50S 4PT4S0000C 00040	16		
	50A	UAB50S 2PT4S0000C 00050	30	UAB50S 3PT4S0000C 00050	20	UAB50S 4PT4S0000C 00050	16		
UAB50H 30kA	15A	UAB50H 2PT4S0000C 00015	30	UAB50H 3PT4S0000C 00015	20	UAB50H 4PT4S0000C 00015	16		
	16A	UAB50H 2PT4S0000C 00016	30	UAB50H 3PT4S0000C 00016	20	UAB50H 4PT4S0000C 00016	16		
	20A	UAB50H 2PT4S0000C 00020	30	UAB50H 3PT4S0000C 00020	20	UAB50H 4PT4S0000C 00020	16		
	25A	UAB50H 2PT4S0000C 00025	30	UAB50H 3PT4S0000C 00025	20	UAB50H 4PT4S0000C 00025	16		
	30A	UAB50H 2PT4S0000C 00030	30	UAB50H 3PT4S0000C 00030	20	UAB50H 4PT4S0000C 00030	16		
	32A	UAB50H 2PT4S0000C 00032	30	UAB50H 3PT4S0000C 00032	20	UAB50H 4PT4S0000C 00032	16		
	40A	UAB50H 2PT4S0000C 00040	30	UAB50H 3PT4S0000C 00040	20	UAB50H 4PT4S0000C 00040	16		
	50A	UAB50H 2PT4S0000C 00050	30	UAB50H 3PT4S0000C 00050	20	UAB50H 4PT4S0000C 00050	16		

50℃

Model / Breaking capacity at AC380/415V	Rated current	2 pole		3 pole		4 pole		Specification	Category
		Code	Unit (EA)	Code	Unit (EA)	Code	Unit (EA)		
UAB50S 25kA	15A	UAB50S 2PT5S0000C 00015	30	UAB50S 3PT5S0000C 00015	20	UAB50S 4PT5S0000C 00015	16	Screw type terminal connection, No option, 50/60Hz	MCCB /M2
	16A	UAB50S 2PT5S0000C 00016	30	UAB50S 3PT5S0000C 00016	20	UAB50S 4PT5S0000C 00016	16		
	20A	UAB50S 2PT5S0000C 00020	30	UAB50S 3PT5S0000C 00020	20	UAB50S 4PT5S0000C 00020	16		
	25A	UAB50S 2PT5S0000C 00025	30	UAB50S 3PT5S0000C 00025	20	UAB50S 4PT5S0000C 00025	16		
	30A	UAB50S 2PT5S0000C 00030	30	UAB50S 3PT5S0000C 00030	20	UAB50S 4PT5S0000C 00030	16		
	32A	UAB50S 2PT5S0000C 00032	30	UAB50S 3PT5S0000C 00032	20	UAB50S 4PT5S0000C 00032	16		
	40A	UAB50S 2PT5S0000C 00040	30	UAB50S 3PT5S0000C 00040	20	UAB50S 4PT5S0000C 00040	16		
	50A	UAB50S 2PT5S0000C 00050	30	UAB50S 3PT5S0000C 00050	20	UAB50S 4PT5S0000C 00050	16		
UAB50H 30kA	15A	UAB50H 2PT5S0000C 00015	30	UAB50H 3PT5S0000C 00015	20	UAB50H 4PT5S0000C 00015	16		
	16A	UAB50H 2PT5S0000C 00016	30	UAB50H 3PT5S0000C 00016	20	UAB50H 4PT5S0000C 00016	16		
	20A	UAB50H 2PT5S0000C 00020	30	UAB50H 3PT5S0000C 00020	20	UAB50H 4PT5S0000C 00020	16		
	25A	UAB50H 2PT5S0000C 00025	30	UAB50H 3PT5S0000C 00025	20	UAB50H 4PT5S0000C 00025	16		
	30A	UAB50H 2PT5S0000C 00030	30	UAB50H 3PT5S0000C 00030	20	UAB50H 4PT5S0000C 00030	16		
	32A	UAB50H 2PT5S0000C 00032	30	UAB50H 3PT5S0000C 00032	20	UAB50H 4PT5S0000C 00032	16		
	40A	UAB50H 2PT5S0000C 00040	30	UAB50H 3PT5S0000C 00040	20	UAB50H 4PT5S0000C 00040	16		
	50A	UAB50H 2PT5S0000C 00050	30	UAB50H 3PT5S0000C 00050	20	UAB50H 4PT5S0000C 00050	16		

• Adjustable thermal & fixed instantaneous / Thermal magnetic trip

40/45℃

Model / Breaking capacity at AC380/415V	Rated current	3 pole		4 pole		Specification	Category
		Code	Unit (EA)	Code	Unit (EA)		
UAB50S 25kA	15A	UAB50S 3PT4S0000C 00015F	20	UAB50S 4PT4S0000C 00015F	16	Screw type terminal connection, No option, 50/60Hz	MCCB /M2
	16A	UAB50S 3PT4S0000C 00016F	20	UAB50S 4PT4S0000C 00016F	16		
	20A	UAB50S 3PT4S0000C 00020F	20	UAB50S 4PT4S0000C 00020F	16		
	25A	UAB50S 3PT4S0000C 00025F	20	UAB50S 4PT4S0000C 00025F	16		
	30A	UAB50S 3PT4S0000C 00030F	20	UAB50S 4PT4S0000C 00030F	16		
	32A	UAB50S 3PT4S0000C 00032F	20	UAB50S 4PT4S0000C 00032F	16		
	40A	UAB50S 3PT4S0000C 00040F	20	UAB50S 4PT4S0000C 00040F	16		
	50A	UAB50S 3PT4S0000C 00050F	20	UAB50S 4PT4S0000C 00050F	16		
UAB50H 30kA	15A	UAB50H 3PT4S0000C 00015F	20	UAB50H 4PT4S0000C 00015F	16		
	16A	UAB50H 3PT4S0000C 00016F	20	UAB50H 4PT4S0000C 00016F	16		
	20A	UAB50H 3PT4S0000C 00020F	20	UAB50H 4PT4S0000C 00020F	16		
	25A	UAB50H 3PT4S0000C 00025F	20	UAB50H 4PT4S0000C 00025F	16		
	30A	UAB50H 3PT4S0000C 00030F	20	UAB50H 4PT4S0000C 00030F	16		
	32A	UAB50H 3PT4S0000C 00032F	20	UAB50H 4PT4S0000C 00032F	16		
	40A	UAB50H 3PT4S0000C 00040F	20	UAB50H 4PT4S0000C 00040F	16		
	50A	UAB50H 3PT4S0000C 00050F	20	UAB50H 4PT4S0000C 00050F	16		

50℃

Model / Breaking capacity at AC380/415V	Rated current	3 pole		4 pole		Specification	Category
		Code	Unit (EA)	Code	Unit (EA)		
UAB50S 25kA	15A	UAB50S 3PT5S0000C 00015F	20	UAB50S 4PT5S0000C 00015F	16	Screw type terminal connection, No option, 50/60Hz	MCCB /M2
	16A	UAB50S 3PT5S0000C 00016F	20	UAB50S 4PT5S0000C 00016F	16		
	20A	UAB50S 3PT5S0000C 00020F	20	UAB50S 4PT5S0000C 00020F	16		
	25A	UAB50S 3PT5S0000C 00025F	20	UAB50S 4PT5S0000C 00025F	16		
	30A	UAB50S 3PT5S0000C 00030F	20	UAB50S 4PT5S0000C 00030F	16		
	32A	UAB50S 3PT5S0000C 00032F	20	UAB50S 4PT5S0000C 00032F	16		
	40A	UAB50S 3PT5S0000C 00040F	20	UAB50S 4PT5S0000C 00040F	16		
	50A	UAB50S 3PT5S0000C 00050F	20	UAB50S 4PT5S0000C 00050F	16		
UAB50H 30kA	15A	UAB50H 3PT5S0000C 00015F	20	UAB50H 4PT5S0000C 00015F	16		
	16A	UAB50H 3PT5S0000C 00016F	20	UAB50H 4PT5S0000C 00016F	16		
	20A	UAB50H 3PT5S0000C 00020F	20	UAB50H 4PT5S0000C 00020F	16		
	25A	UAB50H 3PT5S0000C 00025F	20	UAB50H 4PT5S0000C 00025F	16		
	30A	UAB50H 3PT5S0000C 00030F	20	UAB50H 4PT5S0000C 00030F	16		
	32A	UAB50H 3PT5S0000C 00032F	20	UAB50H 4PT5S0000C 00032F	16		
	40A	UAB50H 3PT5S0000C 00040F	20	UAB50H 4PT5S0000C 00040F	16		
	50A	UAB50H 3PT5S0000C 00050F	20	UAB50H 4PT5S0000C 00050F	16		

Specifications and Standard Order Codes

| UAB type / 60AF |

- UAB60C 7.5/5kA
- UAB60R 14/10kA

					UAB60C	UAB60R
						
Number of poles (P)					2, 3, 4	
Degree of protection (with terminal cover)					IP20	
Utilization category					A	
Suitability of isolation					○	
Protection					overload, inst., short-circuit	
Rating	Rated current (A)				5,10,15,20,30,40,50,60	
	Rated insulation voltage [Ui] (V)				AC690	
	Rated operational voltage [Ue] (V)				AC660	
	Rated impulse withstand voltage [Uimp] (kV)				6	
Rated short-circuit breaking capacity IEC 60947-2 K 60947-2	Ultimate [Icu] (kA r.m.s.)	AC600/660V, 50-60Hz			2.5	5
		AC480/500V, 50-60Hz			2.5	7.5
		AC440/460V, 50-60Hz			5	10
		AC380/415V, 50-60Hz			7.5/5	14/10
		AC220/240V, 50-60Hz			10	25
	Service [Ics]	% of [Icu]			50	
Trip mechanism & Protection characteristics	Hydraulic magnetic	Fixed thermal, Fixed instantaneous		INST	○	
					12×In	
Mounting	Direct mounting by screw				○	
	Plug-in	for Switchboard	Both line & load side		○	
			Line side only		○	
		for Distribution board			○[1]	
Terminal connection		Screw			○[1]	
Durability (times)	Mechanical operation				25,000	
	Electrical operation				10,000	
Dimensions (mm)	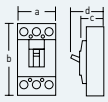	2/3/4P	a	Width	50/75/100	
			b	Height	130	
			c	Depth	60	
			d		82	
Weight (kg, breaker only)		2/3/4P			0.45/0.65/0.85	

※ - The breaking capacity highlighted with blue and thick type is standard nominal value for each model in this catalogue.
1] Available for 3P breaker

▪ Accessories

• Signal

Auxiliary switch	1C, right-hand-side	2C, right-hand-side			
	AUX 10A R1	AUX 10A R2			
Trip alarm switch	1C, right-hand-side				
	ALT 10A R1				
Shunt trip[1]	DC24V	DC100-110V	AC100-120V	AC200-230V	AC380-415V	AC440-480V
	SHT 10A A	SHT 10A C	SHT 10A F	SHT 10A H	
Under voltage trip[2]	DC24V	DC100-110V	AC100-120V	AC200-230V	AC380-415V	AC440-480V
	*UVT 10A J	*UVT 10A L	*UVT 10A N	*UVT 10A P	*UVT 10A Q	*UVT 10A R

※ 1] The permissible operating voltage: 85-110% of rated voltage for AC , 75-125% for DC
2] The permissible operating voltage: 85-110% of rated voltage(AC), 85-125% of rated voltage(DC)
The tripping voltage: 20-70% of rated voltage(AC/DC)
Be sure not to use UVT for the electrical interlock system.
*Reset is possible without power.

• Operating

Operating handle[1]	Power supply direction		Upper	Right	Left
	Surface	S type	TFG 10AS U4	TFG 10AS R4	TFG 10AS L4
		L type	TFG 10AL U4	–	TFG 10AL L4
	Extended	S type	TFH 10AS		
		L type	TFH 10AL		
Motor operator[2]			DC24V	AC/DC110V	AC/DC220V
			MOT 10A DC24	MOT 10A ADC110	MOT 10A ADC220
Mechanical interlock			2 pole	3 pole	4 pole
			–	MIF 10A 3	MIF 10A 4
Padlock plate[3]			PLD 10UA		

※ 1] Available for 3P, 4P breaker. For detail type information, please refer to page 195-202. 2] Motor operator is not recommended for marine application.
3] Padlock is not supplied.

• Mounting

Plug-in[1]	Structure		For both line & load side	For line side only
	Mounting base		TDM 10AP	TDM 10AF
	Connection block[2]	2C contact	CBM 10AB 2	–
		3C contact	CBM 10AB 3	–
	Conn. block barrier		CBM BARR	–

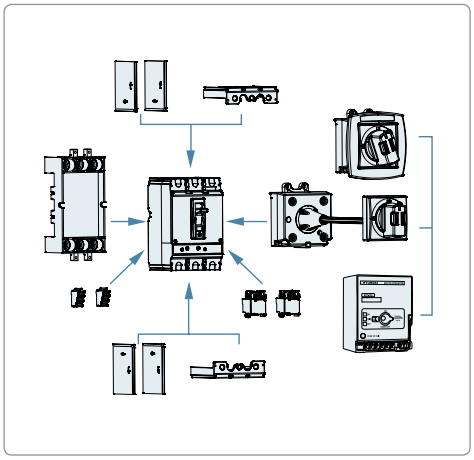

※ 1] Available for 3P, 4P breaker
2] Connection blocks are required for internal accessory installation in both line & load side plug-in type 3P breaker.

• Terminal

Cage terminal block		3EA/SET	4EA/SET	
	5-50A	CTB 10A 3S50	CTB 10A 4S50	
	60A	CTB 10A 3S100	CTB 10A 4S100	
Terminal cover[1]		2 pole	3 pole	4 pole
		TCF 10AP 2	TCF 10AP 3	TCF 10AP 4
Interpole barrier[2]	2EA/SET	TQQ 10A 3PLINE		

※ 1] For both line and load side of breaker, 2EA shall be ordered.
2] Supplied as standard component
Required quantity for both line and load side of breaker: 2 pole 2EA, 3 pole 4EA, 4 pole 6EA

▪ Standard order code and unit

• Fixed thermal & fixed instantaneous / Hydraulic magnetic trip

40/45℃

Model / Breaking capacity at AC380/415V	Rated current	2 pole		3 pole		4 pole		Specification	Category
		Code	Unit (EA)	Code	Unit (EA)	Code	Unit (EA)		
UAB60C 7.5/5kA	5A	UAB60C 2PT4S0000C 00005	30	UAB60C 3PT4S0000C 00005	20	UAB60C 4PT4S0000C 00005	16	Screw type terminal connection, No option, 50/60Hz	MCCB /M1
	10A	UAB60C 2PT4S0000C 00010	30	UAB60C 3PT4S0000C 00010	20	UAB60C 4PT4S0000C 00010	16		
	15A	UAB60C 2PT4S0000C 00015	30	UAB60C 3PT4S0000C 00015	20	UAB60C 4PT4S0000C 00015	16		
	20A	UAB60C 2PT4S0000C 00020	30	UAB60C 3PT4S0000C 00020	20	UAB60C 4PT4S0000C 00020	16		
	30A	UAB60C 2PT4S0000C 00030	30	UAB60C 3PT4S0000C 00030	20	UAB60C 4PT4S0000C 00030	16		
	40A	UAB60C 2PT4S0000C 00040	30	UAB60C 3PT4S0000C 00040	20	UAB60C 4PT4S0000C 00040	16		
	50A	UAB60C 2PT4S0000C 00050	30	UAB60C 3PT4S0000C 00050	20	UAB60C 4PT4S0000C 00050	16		
	60A	UAB60C 2PT4S0000C 00060	30	UAB60C 3PT4S0000C 00060	20	UAB60C 4PT4S0000C 00060	16		
UAB60R 14/10kA	5A	UAB60R 2PT4S0000C 00005	30	UAB60R 3PT4S0000C 00005	20	UAB60R 4PT4S0000C 00005	16		
	10A	UAB60R 2PT4S0000C 00010	30	UAB60R 3PT4S0000C 00010	20	UAB60R 4PT4S0000C 00010	16		
	15A	UAB60R 2PT4S0000C 00015	30	UAB60R 3PT4S0000C 00015	20	UAB60R 4PT4S0000C 00015	16		
	20A	UAB60R 2PT4S0000C 00020	30	UAB60R 3PT4S0000C 00020	20	UAB60R 4PT4S0000C 00020	16		
	30A	UAB60R 2PT4S0000C 00030	30	UAB60R 3PT4S0000C 00030	20	UAB60R 4PT4S0000C 00030	16		
	40A	UAB60R 2PT4S0000C 00040	30	UAB60R 3PT4S0000C 00040	20	UAB60R 4PT4S0000C 00040	16		
	50A	UAB60R 2PT4S0000C 00050	30	UAB60R 3PT4S0000C 00050	20	UAB60R 4PT4S0000C 00050	16		
	60A	UAB60R 2PT4S0000C 00060	30	UAB60R 3PT4S0000C 00060	20	UAB60R 4PT4S0000C 00060	16		

Specifications and Standard Order Codes

| UAB type / 100AF |

• UAB100C 14/10kA

					UAB100C
					
Number of poles (P)					2, 3, 4
Degree of protection (with terminal cover)					IP20
Utilization category					A
Suitability of isolation					○
Protection					overload, inst., short-circuit
Rating	Rated current (A)				5, 10, 15, 20, 30, 40, 50, 60, 75, 100
	Rated insulation voltage [Ui] (V)				AC690
	Rated operational voltage [Ue] (V)				AC660
	Rated impulse withstand voltage [Uimp] (kV)				6
Rated short-circuit breaking capacity IEC 60947-2 K 60947-2	Ultimate [Icu] (kA r.m.s.)	AC600/660V, 50-60Hz			5
		AC480/500V, 50-60Hz			7.5
		AC440/460V, 50-60Hz			10
		AC380/415V, 50-60Hz			14/10
		AC220/240V, 50-60Hz			25
	Service [Ics]	% of [Icu]			50
Trip mechanism & Protection characteristics	Hydraulic magnetic	Fixed thermal, Fixed instantaneous			○
				INST	12×In
Mounting	Direct mounting by screw				○
	Plug-in	for Switchboard	Both line & load side		○
			Line side only		○ [1]
		for Distribution board			○ [1]
Terminal connection		Screw			○
Durability (times)	Mechanical operation				25,000
	Electrical operation				10,000
Dimensions (mm)	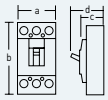	2/3/4P	a	Width	50/75/100
			b	Height	130
			c	Depth	60
			d		82
Weight (kg, breaker only)		2/3/4P			0.45/0.65/0.85

※ - The breaking capacity highlighted with blue and thick type is standard nominal value for each model in this catalogue.
1] Available for 3P breaker

▪ Accessories

• Signal

Auxiliary switch	1C, right-hand-side	2C, right-hand-side				
	AUX 10A R1	AUX 10A R2				
Trip alarm switch	1C, right-hand-side					
	ALT 10A R1					
Shunt trip [1]	DC24V	DC100-110V	AC100-120V	AC200-230V	AC380-415V	AC440-480V
	SHT 10A A	SHT 10A C	SHT 10A F	SHT 10A H		
Under voltage trip [2]	DC24V	DC100-110V	AC100-120V	AC200-230V	AC380-415V	AC440-480V
	*UVT 10A J	*UVT 10A L	*UVT 10A N	*UVT 10A P	*UVT 10A Q	*UVT 10A R

※ 1] The permissible operating voltage: 85-110% of rated voltage for AC , 75-125% for DC
2] The permissible operating voltage: 85-110% of rated voltage(AC), 85-125% of rated voltage(DC)
The tripping voltage: 20-70% of rated voltage(AC/DC)
Be sure not to use UVT for the electrical interlock system.
*Reset is possible without power.

• Operating

Operating handle[1]	Power supply direction		Upper	Right	Left
	Surface	S type	TFG 10AS U4	TFG 10AS R4	TFG 10AS L4
		L type	TFG 10AL U4	–	TFG 10AL L4
	Extended	S type	TFH 10AS		
		L type	TFH 10AL		
Motor operator[2]			DC24V	AC/DC110V	AC/DC220V
			MOT 10A DC24	MOT 10A ADC110	MOT 10A ADC220
Mechanical interlock			2 pole	3 pole	4 pole
			–	MIF 10A 3	MIF 10A 4
Padlock plate[3]			PLD 10UA		

※ 1] Available for 3P, 4P breaker. For detail type information, please refer to page 195-202. 2] Motor operator is not recommended for marine application.
3] Padlock is not supplied.

• Mounting

Plug-in[1]	Structure		For both line & load side	For line side only
	Mounting base		TDM 10AP	TDM 10AF
	Connection block[2]	2C contact	CBM 10AB 2	–
		3C contact	CBM 10AB 3	–
	Conn. block barrier		CBM BARR	–

※ 1] Available for 3P, 4P breaker
2] Connection blocks are required for internal accessory installation in both line & load side plug-in type 3P breaker.

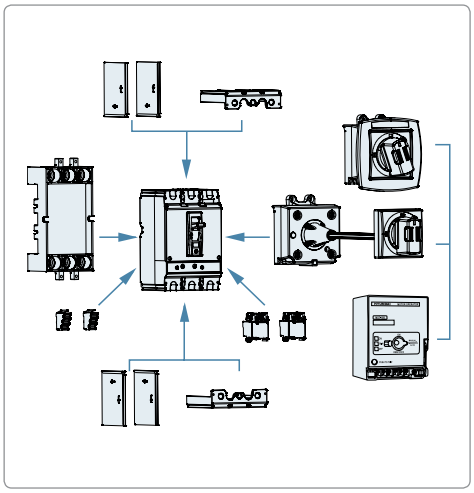

• Terminal

Cage terminal block		3EA/SET	4EA/SET	
	5-50A	CTB 10A 3S50	CTB 10A 4S50	
	60-100A	CTB 10A 3S100	CTB 10A 4S100	
Terminal cover[1]		2 pole	3 pole	4 pole
		TCF 10AP 2	TCF 10AP 3	TCF 10AP 4
Interpole barrier[2]	2EA/SET	TQQ 10A 3PLINE		

※ 1] For both line and load side of breaker, 2EA shall be ordered.
2] Supplied as standard component
Required quantity for both line and load side of breaker: 2 pole 2EA, 3 pole 4EA, 4 pole 6EA

▪ Standard order code and unit

• Fixed thermal & fixed instantaneous / Hydraulic magnetic trip

40/45℃

Model / Breaking capacity at AC380/415V	Rated current	2 pole		3 pole		4 pole		Specification	Category
		Code	Unit (EA)	Code	Unit (EA)	Code	Unit (EA)		
UAB100C 14/10kA	5A	UAB100C 2PT4S0000C 00005	30	UAB100C 3PT4S0000C 00005	20	UAB100C 4PT4S0000C 00005	16	Screw type terminal connection, No option, 50/60Hz	MCCB /M1
	10A	UAB100C 2PT4S0000C 00010	30	UAB100C 3PT4S0000C 00010	20	UAB100C 4PT4S0000C 00010	16		
	15A	UAB100C 2PT4S0000C 00015	30	UAB100C 3PT4S0000C 00015	20	UAB100C 4PT4S0000C 00015	16		
	20A	UAB100C 2PT4S0000C 00020	30	UAB100C 3PT4S0000C 00020	20	UAB100C 4PT4S0000C 00020	16		
	30A	UAB100C 2PT4S0000C 00030	30	UAB100C 3PT4S0000C 00030	20	UAB100C 4PT4S0000C 00030	16		
	40A	UAB100C 2PT4S0000C 00040	30	UAB100C 3PT4S0000C 00040	20	UAB100C 4PT4S0000C 00040	16		
	50A	UAB100C 2PT4S0000C 00050	30	UAB100C 3PT4S0000C 00050	20	UAB100C 4PT4S0000C 00050	16		
	60A	UAB100C 2PT4S0000C 00060	30	UAB100C 3PT4S0000C 00060	20	UAB100C 4PT4S0000C 00060	16		
	75A	UAB100C 2PT4S0000C 00075	30	UAB100C 3PT4S0000C 00075	20	UAB100C 4PT4S0000C 00075	16		
	100A	UAB100C 2PT4S0000C 00100	30	UAB100C 3PT4S0000C 00100	20	UAB100C 4PT4S0000C 00100	16		

Specifications and Standard Order Codes

| UAB type / 100AF |

- UAB100R 25kA
- UAB100S 30kA

					UAB100R	UAB100S
						
Number of poles (P)					2, 3, 4	
Degree of protection (with terminal cover)					IP20	
Utilization category					A	
Suitability of isolation					○	
Protection					overload, inst., short-circuit	
Rating	Rated current (A)				15, 16, 20, 25, 30, 32, 40, 50, 60, 63, 75, 80, 100	
	Rated insulation voltage [Ui] (V)				AC690	
	Rated operational voltage [Ue] (V)				AC660	
					DC250	
	Rated impulse withstand voltage [Uimp] (kV)				6	
Rated short-circuit breaking capacity IEC 60947-2 K 60947-2	Ultimate [Icu] (kA r.m.s.)	AC600/660V, 50-60Hz			7.5	10
		AC480/500V, 50-60Hz			7.5	14
		AC440/460V, 50-60Hz			21	25
		AC380/415V, 50-60Hz			25	30
		AC220/240V, 50-60Hz			42	50
		DC250V			10	14
		DC125V			15	20
	Service [Ics]	% of [Icu]			25	
Trip mechanism & Protection characteristics	Thermal magnetic	Fixed thermal, Fixed instantaneous			○	
				INST	15-32A: 20×In, 40-100A: 10×In	
		Adjustable thermal, Fixed instantaneous		LTD	(0.8-0.9-1)×In[2]	
				INST	15-32A: 20×In, 40-100A: 10×In	
Mounting	Direct mounting by screw				○	
	Plug-in	for Switchboard	Both line & load side		○	
			Line side only		○[1]	
		for Distribution board			○[1]	
	DIN-rail	with DIN-rail adaptor			○	
Terminal connection		Screw			○	
Durability (times)	Mechanical operation				25,000	
	Electrical operation				10,000	
Dimensions (mm)	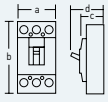	2/3/4P	a	Width	50/75/100	
			b	Height	130	
			c	Depth	60	
			d		82	
Weight (kg, breaker only)		2/3/4P			0.6/0.78/0.96	

※ - The breaking capacity highlighted with blue and thick type is standard nominal value for each model in this catalogue.
1] Available for 3P breaker 2] Available for 3P, 4P breaker

▪ Accessories

• Signal

Auxiliary switch	1C, right-hand-side	1C, left-hand-side				
	AUX 10UA R1	AUX 10UA L1				
Trip alarm switch	1C, right-hand-side	1C, left-hand-side				
	ALT 10UA R1	ALT 10UA L1				
Shunt trip[1]	DC24V	DC100-110V	AC100-120V	AC200-230V	AC380-415V	AC440-480V
	SHT 10UA A	–	SHT 10UA F	SHT 10UA H	SHT 10UA B	SHT 10UA D
Under voltage trip[2]	DC24V	DC100-110V	AC100-120V	AC200-230V	AC380-415V	AC440-480V
	UVT 10UA J	UVT 10UA L	UVT 10UA N	UVT 10UA P	UVT 10UA Q	UVT 10UA R

※ 1] The permissible operating voltage: 85-110% of rated voltage for AC , 75-125% for DC
2] The permissible operating voltage: 85-110% of rated voltage(AC), 85-125% of rated voltage(DC)
The tripping voltage: 20-70% of rated voltage(AC/DC)
Be sure not to use UVT for the electrical interlock system.

• Operating

Operating handle[1]	**Power supply direction**		Upper	Right	Left
	Surface	**S type**	TFG 10UAS U4	TFG 10UAS R4	TFG 10UAS L4
		L type	TFG 10UAL U4	–	TFG 10UAL L4
	Extended	**S type**	TFH 10UAS		
		L type	TFH 10UAL		
Motor operator[2]			DC24V	AC/DC110V	AC/DC220V
			MOT 10UA DC24	MOT 10UA ADC110	MOT 10UA ADC220
Mechanical interlock			2 pole	3 pole	4 pole
			–	MIF 10UA 3	MIF 10UA 4
Padlock plate[3]			PLD 10UA		

※ 1] Available for 3P, 4P breaker. For detail type information, please refer to page 195-202.
2] Motor operator is not recommended for marine application.
3] Padlock is not supplied.

• Mounting

DIN-rail adaptor			DRA 10UA	
Plug-in[1]	**Structure**		For both line & load side	For line side only
	Mounting base		TDM 10AP	TDM 10AF
	Connection block[2]	**2C contact**	CBM 10AB 2	–
		3C contact	CBM 10AB 3	–
	Conn. block barrier		CBM BARR	–

※ 1] Available for 3P breaker
2] Connection blocks are required for internal accessory installation in both line & load side plug-in type 3P breaker.

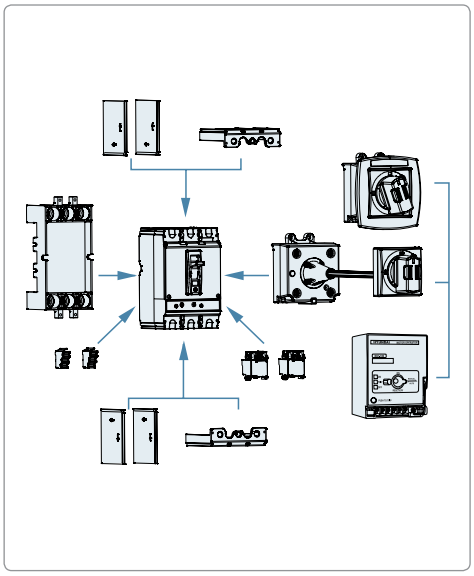

• Terminal

Cage terminal block		3EA/SET	4EA/SET	
	15-50A	CTB 10A 3S50	CTB 10A 4S50	
	60-100A	CTB 10A 3S100	CTB 10A 4S100	
Terminal cover[1]		2 pole	3 pole	4 pole
		TCF 10AP 2	TCF 10AP 3	TCF 10AP 4
Interpole barrier[2]	**2EA/SET**	TQQ 10A 3PLINE		

※ 1] For both line and load side of breaker, 2EA shall be ordered.
2] Supplied as standard component
Required quantity for both line and load side of breaker: 2 pole 2EA, 3 pole 4EA, 4 pole 6EA

Specifications and Standard Order Codes

▪ Standard order code and unit

• Fixed thermal & fixed instantaneous / Thermal magnetic trip

40/45℃

Model / Breaking capacity at AC380/415V	Rated current	2 pole		3 pole		4 pole		Specification	Category
		Code	Unit (EA)	Code	Unit (EA)	Code	Unit (EA)		
UAB100R 25kA	15A	UAB100R 2PT4S0000C 00015	30	UAB100R 3PT4S0000C 00015	20	UAB100R 4PT4S0000C 00015	16	Screw type terminal connection, No option, 50/60Hz	MCCB /M2
	16A	UAB100R 2PT4S0000C 00016	30	UAB100R 3PT4S0000C 00016	20	UAB100R 4PT4S0000C 00016	16		
	20A	UAB100R 2PT4S0000C 00020	30	UAB100R 3PT4S0000C 00020	20	UAB100R 4PT4S0000C 00020	16		
	25A	UAB100R 2PT4S0000C 00025	30	UAB100R 3PT4S0000C 00025	20	UAB100R 4PT4S0000C 00025	16		
	30A	UAB100R 2PT4S0000C 00030	30	UAB100R 3PT4S0000C 00030	20	UAB100R 4PT4S0000C 00030	16		
	32A	UAB100R 2PT4S0000C 00032	30	UAB100R 3PT4S0000C 00032	20	UAB100R 4PT4S0000C 00032	16		
	40A	UAB100R 2PT4S0000C 00040	30	UAB100R 3PT4S0000C 00040	20	UAB100R 4PT4S0000C 00040	16		
	50A	UAB100R 2PT4S0000C 00050	30	UAB100R 3PT4S0000C 00050	20	UAB100R 4PT4S0000C 00050	16		
	60A	UAB100R 2PT4S0000C 00060	30	UAB100R 3PT4S0000C 00060	20	UAB100R 4PT4S0000C 00060	16		
	63A	UAB100R 2PT4S0000C 00063	30	UAB100R 3PT4S0000C 00063	20	UAB100R 4PT4S0000C 00063	16		
	75A	UAB100R 2PT4S0000C 00075	30	UAB100R 3PT4S0000C 00075	20	UAB100R 4PT4S0000C 00075	16		
	80A	UAB100R 2PT4S0000C 00080	30	UAB100R 3PT4S0000C 00080	20	UAB100R 4PT4S0000C 00080	16		
	100A	UAB100R 2PT4S0000C 00100	30	UAB100R 3PT4S0000C 00100	20	UAB100R 4PT4S0000C 00100	16		
UAB100S 30kA	15A	UAB100S 2PT4S0000C 00015	30	UAB100S 3PT4S0000C 00015	20	UAB100S 4PT4S0000C 00015	16		
	16A	UAB100S 2PT4S0000C 00016	30	UAB100S 3PT4S0000C 00016	20	UAB100S 4PT4S0000C 00016	16		
	20A	UAB100S 2PT4S0000C 00020	30	UAB100S 3PT4S0000C 00020	20	UAB100S 4PT4S0000C 00020	16		
	25A	UAB100S 2PT4S0000C 00025	30	UAB100S 3PT4S0000C 00025	20	UAB100S 4PT4S0000C 00025	16		
	30A	UAB100S 2PT4S0000C 00030	30	UAB100S 3PT4S0000C 00030	20	UAB100S 4PT4S0000C 00030	16		
	32A	UAB100S 2PT4S0000C 00032	30	UAB100S 3PT4S0000C 00032	20	UAB100S 4PT4S0000C 00032	16		
	40A	UAB100S 2PT4S0000C 00040	30	UAB100S 3PT4S0000C 00040	20	UAB100S 4PT4S0000C 00040	16		
	50A	UAB100S 2PT4S0000C 00050	30	UAB100S 3PT4S0000C 00050	20	UAB100S 4PT4S0000C 00050	16		
	60A	UAB100S 2PT4S0000C 00060	30	UAB100S 3PT4S0000C 00060	20	UAB100S 4PT4S0000C 00060	16		
	63A	UAB100S 2PT4S0000C 00063	30	UAB100S 3PT4S0000C 00063	20	UAB100S 4PT4S0000C 00063	16		
	75A	UAB100S 2PT4S0000C 00075	30	UAB100S 3PT4S0000C 00075	20	UAB100S 4PT4S0000C 00075	16		
	80A	UAB100S 2PT4S0000C 00080	30	UAB100S 3PT4S0000C 00080	20	UAB100S 4PT4S0000C 00080	16		
	100A	UAB100S 2PT4S0000C 00100	30	UAB100S 3PT4S0000C 00100	20	UAB100S 4PT4S0000C 00100	16		

50℃

Model / Breaking capacity at AC380/415V	Rated current	2 pole		3 pole		4 pole		Specification	Category
		Code	Unit (EA)	Code	Unit (EA)	Code	Unit (EA)		
UAB100R 25kA	15A	UAB100R 2PT5S0000C 00015	30	UAB100R 3PT5S0000C 00015	20	UAB100R 4PT5S0000C 00015	16	Screw type terminal connection, No option, 50/60Hz	MCCB /M2
	16A	UAB100R 2PT5S0000C 00016	30	UAB100R 3PT5S0000C 00016	20	UAB100R 4PT5S0000C 00016	16		
	20A	UAB100R 2PT5S0000C 00020	30	UAB100R 3PT5S0000C 00020	20	UAB100R 4PT5S0000C 00020	16		
	25A	UAB100R 2PT5S0000C 00025	30	UAB100R 3PT5S0000C 00025	20	UAB100R 4PT5S0000C 00025	16		
	30A	UAB100R 2PT5S0000C 00030	30	UAB100R 3PT5S0000C 00030	20	UAB100R 4PT5S0000C 00030	16		
	32A	UAB100R 2PT5S0000C 00032	30	UAB100R 3PT5S0000C 00032	20	UAB100R 4PT5S0000C 00032	16		
	40A	UAB100R 2PT5S0000C 00040	30	UAB100R 3PT5S0000C 00040	20	UAB100R 4PT5S0000C 00040	16		
	50A	UAB100R 2PT5S0000C 00050	30	UAB100R 3PT5S0000C 00050	20	UAB100R 4PT5S0000C 00050	16		
	60A	UAB100R 2PT5S0000C 00060	30	UAB100R 3PT5S0000C 00060	20	UAB100R 4PT5S0000C 00060	16		
	63A	UAB100R 2PT5S0000C 00063	30	UAB100R 3PT5S0000C 00063	20	UAB100R 4PT5S0000C 00063	16		
	75A	UAB100R 2PT5S0000C 00075	30	UAB100R 3PT5S0000C 00075	20	UAB100R 4PT5S0000C 00075	16		
	80A	UAB100R 2PT5S0000C 00080	30	UAB100R 3PT5S0000C 00080	20	UAB100R 4PT5S0000C 00080	16		
	100A	UAB100R 2PT5S0000C 00100	30	UAB100R 3PT5S0000C 00100	20	UAB100R 4PT5S0000C 00100	16		
UAB100S 30kA	15A	UAB100S 2PT5S0000C 00015	30	UAB100S 3PT5S0000C 00015	20	UAB100S 4PT5S0000C 00015	16		
	16A	UAB100S 2PT5S0000C 00016	30	UAB100S 3PT5S0000C 00016	20	UAB100S 4PT5S0000C 00016	16		
	20A	UAB100S 2PT5S0000C 00020	30	UAB100S 3PT5S0000C 00020	20	UAB100S 4PT5S0000C 00020	16		
	25A	UAB100S 2PT5S0000C 00025	30	UAB100S 3PT5S0000C 00025	20	UAB100S 4PT5S0000C 00025	16		
	30A	UAB100S 2PT5S0000C 00030	30	UAB100S 3PT5S0000C 00030	20	UAB100S 4PT5S0000C 00030	16		
	32A	UAB100S 2PT5S0000C 00032	30	UAB100S 3PT5S0000C 00032	20	UAB100S 4PT5S0000C 00032	16		
	40A	UAB100S 2PT5S0000C 00040	30	UAB100S 3PT5S0000C 00040	20	UAB100S 4PT5S0000C 00040	16		
	50A	UAB100S 2PT5S0000C 00050	30	UAB100S 3PT5S0000C 00050	20	UAB100S 4PT5S0000C 00050	16		
	60A	UAB100S 2PT5S0000C 00060	30	UAB100S 3PT5S0000C 00060	20	UAB100S 4PT5S0000C 00060	16		
	63A	UAB100S 2PT5S0000C 00063	30	UAB100S 3PT5S0000C 00063	20	UAB100S 4PT5S0000C 00063	16		
	75A	UAB100S 2PT5S0000C 00075	30	UAB100S 3PT5S0000C 00075	20	UAB100S 4PT5S0000C 00075	16		
	80A	UAB100S 2PT5S0000C 00080	30	UAB100S 3PT5S0000C 00080	20	UAB100S 4PT5S0000C 00080	16		
	100A	UAB100S 2PT5S0000C 00100	30	UAB100S 3PT5S0000C 00100	20	UAB100S 4PT5S0000C 00100	16		

• Adjustable thermal & fixed instantaneous / Thermal magnetic trip

40/45℃

Model / Breaking capacity at AC380/415V	Rated current	3 pole		4 pole		Specification	Category
		Code	Unit (EA)	Code	Unit (EA)		
UAB100R 25kA	15A	UAB100R 3PT4S0000C 00015F	20	UAB100R 4PT4S0000C 00015F	16	Screw type terminal connection, No option, 50/60Hz	MCCB /M2
	16A	UAB100R 3PT4S0000C 00016F	20	UAB100R 4PT4S0000C 00016F	16		
	20A	UAB100R 3PT4S0000C 00020F	20	UAB100R 4PT4S0000C 00020F	16		
	25A	UAB100R 3PT4S0000C 00025F	20	UAB100R 4PT4S0000C 00025F	16		
	30A	UAB100R 3PT4S0000C 00030F	20	UAB100R 4PT4S0000C 00030F	16		
	32A	UAB100R 3PT4S0000C 00032F	20	UAB100R 4PT4S0000C 00032F	16		
	40A	UAB100R 3PT4S0000C 00040F	20	UAB100R 4PT4S0000C 00040F	16		
	50A	UAB100R 3PT4S0000C 00050F	20	UAB100R 4PT4S0000C 00050F	16		
	60A	UAB100R 3PT4S0000C 00060F	20	UAB100R 4PT4S0000C 00060F	16		
	63A	UAB100R 3PT4S0000C 00063F	20	UAB100R 4PT4S0000C 00063F	16		
	75A	UAB100R 3PT4S0000C 00075F	20	UAB100R 4PT4S0000C 00075F	16		
	80A	UAB100R 3PT4S0000C 00080F	20	UAB100R 4PT4S0000C 00080F	16		
	100A	UAB100R 3PT4S0000C 00100F	20	UAB100R 4PT4S0000C 00100F	16		
UAB100S 30kA	15A	UAB100S 3PT4S0000C 00015F	20	UAB100S 4PT4S0000C 00015F	16		
	16A	UAB100S 3PT4S0000C 00016F	20	UAB100S 4PT4S0000C 00016F	16		
	20A	UAB100S 3PT4S0000C 00020F	20	UAB100S 4PT4S0000C 00020F	16		
	25A	UAB100S 3PT4S0000C 00025F	20	UAB100S 4PT4S0000C 00025F	16		
	30A	UAB100S 3PT4S0000C 00030F	20	UAB100S 4PT4S0000C 00030F	16		
	32A	UAB100S 3PT4S0000C 00032F	20	UAB100S 4PT4S0000C 00032F	16		
	40A	UAB100S 3PT4S0000C 00040F	20	UAB100S 4PT4S0000C 00040F	16		
	50A	UAB100S 3PT4S0000C 00050F	20	UAB100S 4PT4S0000C 00050F	16		
	60A	UAB100S 3PT4S0000C 00060F	20	UAB100S 4PT4S0000C 00060F	16		
	63A	UAB100S 3PT4S0000C 00063F	20	UAB100S 4PT4S0000C 00063F	16		
	75A	UAB100S 3PT4S0000C 00075F	20	UAB100S 4PT4S0000C 00075F	16		
	80A	UAB100S 3PT4S0000C 00080F	20	UAB100S 4PT4S0000C 00080F	16		
	100A	UAB100S 3PT4S0000C 00100F	20	UAB100S 4PT4S0000C 00100F	16		

50℃

Model / Breaking capacity at AC380/415V	Rated current	3 pole		4 pole		Specification	Category
		Code	Unit (EA)	Code	Unit (EA)		
UAB100R 25kA	15A	UAB100R 3PT5S0000C 00015F	20	UAB100R 4PT5S0000C 00015F	16	Screw type terminal connection, No option, 50/60Hz	MCCB /M2
	16A	UAB100R 3PT5S0000C 00016F	20	UAB100R 4PT5S0000C 00016F	16		
	20A	UAB100R 3PT5S0000C 00020F	20	UAB100R 4PT5S0000C 00020F	16		
	25A	UAB100R 3PT5S0000C 00025F	20	UAB100R 4PT5S0000C 00025F	16		
	30A	UAB100R 3PT5S0000C 00030F	20	UAB100R 4PT5S0000C 00030F	16		
	32A	UAB100R 3PT5S0000C 00032F	20	UAB100R 4PT5S0000C 00032F	16		
	40A	UAB100R 3PT5S0000C 00040F	20	UAB100R 4PT5S0000C 00040F	16		
	50A	UAB100R 3PT5S0000C 00050F	20	UAB100R 4PT5S0000C 00050F	16		
	60A	UAB100R 3PT5S0000C 00060F	20	UAB100R 4PT5S0000C 00060F	16		
	63A	UAB100R 3PT5S0000C 00063F	20	UAB100R 4PT5S0000C 00063F	16		
	75A	UAB100R 3PT5S0000C 00075F	20	UAB100R 4PT5S0000C 00075F	16		
	80A	UAB100R 3PT5S0000C 00080F	20	UAB100R 4PT5S0000C 00080F	16		
	100A	UAB100R 3PT5S0000C 00100F	20	UAB100R 4PT5S0000C 00100F	16		
UAB100S 30kA	15A	UAB100S 3PT5S0000C 00015F	20	UAB100S 4PT5S0000C 00015F	16		
	16A	UAB100S 3PT5S0000C 00016F	20	UAB100S 4PT5S0000C 00016F	16		
	20A	UAB100S 3PT5S0000C 00020F	20	UAB100S 4PT5S0000C 00020F	16		
	25A	UAB100S 3PT5S0000C 00025F	20	UAB100S 4PT5S0000C 00025F	16		
	30A	UAB100S 3PT5S0000C 00030F	20	UAB100S 4PT5S0000C 00030F	16		
	32A	UAB100S 3PT5S0000C 00032F	20	UAB100S 4PT5S0000C 00032F	16		
	40A	UAB100S 3PT5S0000C 00040F	20	UAB100S 4PT5S0000C 00040F	16		
	50A	UAB100S 3PT5S0000C 00050F	20	UAB100S 4PT5S0000C 00050F	16		
	60A	UAB100S 3PT5S0000C 00060F	20	UAB100S 4PT5S0000C 00060F	16		
	63A	UAB100S 3PT5S0000C 00063F	20	UAB100S 4PT5S0000C 00063F	16		
	75A	UAB100S 3PT5S0000C 00075F	20	UAB100S 4PT5S0000C 00075F	16		
	80A	UAB100S 3PT5S0000C 00080F	20	UAB100S 4PT5S0000C 00080F	16		
	100A	UAB100S 3PT5S0000C 00100F	20	UAB100S 4PT5S0000C 00100F	16		

Specifications and Standard Order Codes

| UCB type / 50AF |

• UCB50R 30/25kA

					UCB50R
					
Number of poles (P)					2, 3, 4
Degree of protection (with terminal cover)					IP20
Utilization category					A
Suitability of isolation					○
Protection					overload, inst., short-circuit
Rating	Rated current (A)				15, 20, 30, 40, 50
	Rated insulation voltage [Ui] (V)				AC690
	Rated operational voltage [Ue] (V)				AC660
					DC250
	Rated impulse withstand voltage [Uimp] (kV)				6
Rated short-circuit breaking capacity IEC 60947-2 K 60947-2	Ultimate [Icu] (kA r.m.s.)	AC600/660V, 50-60Hz			10
		AC480/500V, 50-60Hz			14
		AC440/460V, 50-60Hz			25
		AC380/415V, 50-60Hz			30/25
		AC220/240V, 50-60Hz			50
		DC250V			14
		DC125V			20
	Service [Ics]	% of [Icu]			50
Trip mechanism & Protection characteristics	Thermal magnetic	Fixed thermal, Fixed instantaneous		INST	○
					10×In
Mounting	Direct mounting by screw				○
	Plug-in	for Switchboard	Both line & load side		○ [1]
			Line side only		○ [1]
		for Distribution board			○ [1]
Terminal connection		Screw			○
Durability (times)	Mechanical operation				25,000
	Electrical operation				10,000
Dimensions (mm)	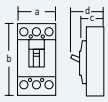	2/3/4P	a	Width	60/90/120
			b	Height	155
			c	Depth	60
			d		84.5
Weight (kg, breaker only)		2/3/4P			0.7/1.0/1.2

※ - The breaking capacity highlighted with blue and thick type is standard nominal value for each model in this catalogue.
1] Available for 3P breaker

■ Accessories

• Signal

Auxiliary switch	1C, left-hand-side					
	AUX 10B L1					
Trip alarm switch	1C, left-hand-side					
	ALT 10B L1					
Shunt trip[1]	DC24V	DC100-110V	AC100-120V	AC200-230V	AC380-415V	AC440-480V
	SHT 10B A	-	SHT 10B F	SHT 10B H		
Under voltage trip[2]	DC24V	DC100-110V	AC100-120V	AC200-230V	AC380-415V	AC440-480V
	UVT 10B J	UVT 10B L	UVT 10B N	UVT 10B P	UVT 10B Q	UVT 10B R

※ 1] The permissible operating voltage: 85-110% of rated voltage for AC , 75-125% for DC
2] The permissible operating voltage: 85-110% of rated voltage(AC), 85~125% of rated voltage(DC)
The tripping voltage: 20-70% of rated voltage(AC/DC)
Be sure not to use UVT for the electrical interlock system.

• Operating

Operating handle[1]	Power supply direction		Upper	Right	Left
	Surface	S type	TFG 10BS U4	TFG 10BS R4	TFG 10BS L4
		L type	TFG 10BL U4	–	TFG 10BL L4
	Extended	S type	TFH 10BS		
		L type	TFH 10BL		
Motor operator[2]			DC24V	AC/DC110V	AC/DC220V
			MOT 10UB DC24	MOT 10UB ADC110	MOT 10UB ADC220
Mechanical interlock			2 pole	3 pole	4 pole
			–	MIF 10UF 3	MIF 10UF 4
Padlock plate[3]			PLD 10UF		

※ 1] Available for 3P, 4P breaker. For detail type information, please refer to page 195-202. 2] Motor operator is not recommended for marine application.
3] Padlock is not supplied.

• Mounting

Plug-in[1]	Structure		For both line & load side	For line side only
	Mounting base		TDM 10BP	TDM 10BF
	Connection block[2]	2C contact	CBM 10AB 2	–
		3C contact	CBM 10AB 3	–
	Conn. block barrier		CBM BARR	–

※ 1] Available for 3P breaker
2] Connection blocks are required for internal accessory installation in both line & load side plug-in type 3P breaker.

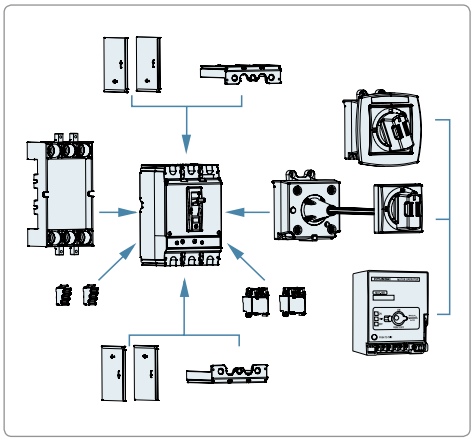

• Terminal

Cage terminal block		3EA/SET	4EA/SET	
		CTB 10B 3S	CTB 10B 4S	
Terminal cover[1]		2 pole	3 pole	4 pole
		TCF 10BP 2	TCF 10BP 3	TCF 10BP 4
Interpole barrier[2]	2EA/SET	TQQ 10B 3PLINE		

※ 1] For both line and load side of breaker, 2EA shall be ordered.
2] Supplied as standard component
Required quantity for both line and load side of breaker: 2 pole 2EA, 3 pole 4EA, 4 pole 6EA

▪ Standard order code and unit

• Fixed thermal & fixed instantaneous / Thermal magnetic trip

40/45℃

Model / Breaking capacity at AC380/415V	Rated current	2 pole		3 pole		4 pole		Specification	Category
		Code	Unit (EA)	Code	Unit (EA)	Code	Unit (EA)		
UCB50R 30/25kA	15A	UCB50R 2PT4S0000C 00015	16	UCB50R 3PT4S0000C 00015	10	UCB50R 4PT4S0000C 00015	8	Screw type terminal connection, No option, 50/60Hz	MCCB /M1
	20A	UCB50R 2PT4S0000C 00020	16	UCB50R 3PT4S0000C 00020	10	UCB50R 4PT4S0000C 00020	8		
	30A	UCB50R 2PT4S0000C 00030	16	UCB50R 3PT4S0000C 00030	10	UCB50R 4PT4S0000C 00030	8		
	40A	UCB50R 2PT4S0000C 00040	16	UCB50R 3PT4S0000C 00040	10	UCB50R 4PT4S0000C 00040	8		
	50A	UCB50R 2PT4S0000C 00050	16	UCB50R 3PT4S0000C 00050	10	UCB50R 4PT4S0000C 00050	8		

50℃

Model / Breaking capacity at AC380/415V	Rated current	2 pole		3 pole		4 pole		Specification	Category
		Code	Unit (EA)	Code	Unit (EA)	Code	Unit (EA)		
UCB50R 30/25kA	15A	UCB50R 2PT5S0000C 00015	16	UCB50R 3PT5S0000C 00015	10	UCB50R 4PT5S0000C 00015	8	Screw type terminal connection, No option, 50/60Hz	MCCB /M1
	20A	UCB50R 2PT5S0000C 00020	16	UCB50R 3PT5S0000C 00020	10	UCB50R 4PT5S0000C 00020	8		
	30A	UCB50R 2PT5S0000C 00030	16	UCB50R 3PT5S0000C 00030	10	UCB50R 4PT5S0000C 00030	8		
	40A	UCB50R 2PT5S0000C 00040	16	UCB50R 3PT5S0000C 00040	10	UCB50R 4PT5S0000C 00040	8		
	50A	UCB50R 2PT5S0000C 00050	16	UCB50R 3PT5S0000C 00050	10	UCB50R 4PT5S0000C 00050	8		

Specifications and Standard Order Codes

| UCB type / 50AF |

- UCB50H 42kA
- UCB50L 50kA

					UCB50H	UCB50L
						
Number of poles (P)					*2, 3, 4	
Degree of protection (with terminal cover)					IP20	
Utilization category					A	
Suitability of isolation					○	
Protection					overload, inst., short-circuit	
Rating	Rated current (A)				15,16,20,25,30,32,40,50	
	Rated insulation voltage [Ui] (V)				AC690	
	Rated operational voltage [Ue] (V)				AC660	
					DC250	
	Rated impulse withstand voltage [Uimp] (kV)				6	
Rated short-circuit breaking capacity IEC 60947-2 K 60947-2	Ultimate [Icu] (kA r.m.s.)	AC600/660V, 50-60Hz			20	25
		AC480/500V, 50-60Hz			30	35
		AC440/460V, 50-60Hz			42	50
		AC380/415V, 50-60Hz			42	50
		AC220/240V, 50-60Hz			85	100
		DC250V			25	40
		DC125V			40	60
	Service [Ics]	% of [Icu]			50	
Trip mechanism & Protection characteristics	Thermal magnetic	Fixed thermal, Fixed instantaneous			○	
				INST	15-32A: 15×In, 40-50A: 10×In	
		Adjustable thermal, Fixed instantaneous		LTD	(0.8-0.9-1)×In	
				INST	15-32A: 15×In, 40-50A: 10×In	
Mounting	Direct mounting by screw				○	
	Plug-in	for Switchboard	Both line & load side		○ [1]	
			Line side only		○ [1]	
		for Distribution board			○ [1]	
Terminal connection		Screw			○	
Durability (times)	Mechanical operation				25,000	
	Electrical operation				10,000	
Dimensions (mm) 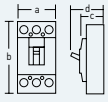		2/3/4P	a	Width	90 [2]/90/120	
			b	Height	155	
			c	Depth	60	
			d		84.5	
Weight (kg, breaker only)		2/3/4P			0.9/1.0/1.3	

※ - The breaking capacity highlighted with blue and thick type is standard nominal value for each model in this catalogue.

1] Available for 3P breaker

2] *2P breaker has same dimension as 3P breaker, but the middle pole is removed.

▪ Accessories

• Signal

Auxiliary switch	1C, left-hand-side	2C, left-hand-side				
	AUX 12FG L1	AUX 12FG L2				
Trip alarm switch	1C, right-hand-side	1C, left-hand-side				
	ALT 12FG R1	ALT 12FG L1				
Shunt trip[1]	DC24V	DC100-110V	AC100-120V	AC200-230V	AC380-415V	AC440-480V
	SHT 12FG A	SHT 12FG C	SHT 12FG F	SHT 12FG H	SHT 12FG B	SHT 12FG D
Under voltage trip[2]	DC24V	DC100-110V	AC100-120V	AC200-230V	AC380-415V	AC440-480V
	UVT 12FG J	UVT 12FG L	UVT 12FG N	UVT 12FG P	UVT 12FG Q	UVT 12FG R

※ 1] The permissible operating voltage: 85-110% of rated voltage for AC , 75-125% for DC
2] The permissible operating voltage: 85-110% of rated voltage(AC), 85-125% of rated voltage(DC)
The tripping voltage: 20-70% of rated voltage(AC/DC)
Be sure not to use UVT for the electrical interlock system.

• Operating

Operating handle[1]	**Power supply direction**		Upper	Right	Left
	Surface	**S type**	TFG 10UFS U4	TFG 10UFS R4	TFG 10UFS L4
		L type	TFG 10UFL U4	–	TFG 10UFL L4
	Extended	**S type**	TFH 10UFS		
		L type	TFH 10UFL		
Motor operator[2]			DC24V	AC/DC110V	AC/DC220V
			MOT 10F DC24	MOT 10F ADC110	MOT 10F ADC220
Mechanical interlock			2 pole	3 pole	4 pole
			–	MIF 10UF 3	MIF 10UF 4
Padlock plate[3]			PLD 10UF		

※ 1] For detail type information, please refer to page 195-202.
2] Motor operator is not recommended for marine application.
3] Padlock is not supplied.

• Mounting

Plug-in[1]	**Structure**		For both line & load side	For line side only
	Mounting base		TDM 10BP	TDM 10BF
	Connection block[2]	**2C contact**	CBM 10AB 2	–
		3C contact	CBM 10AB 3	–
	Conn. block barrier		CBM BARR	–

※ 1] Available for 3P breaker
2] Connection blocks are required for internal accessory installation in both line & load side plug-in type 3P breaker.

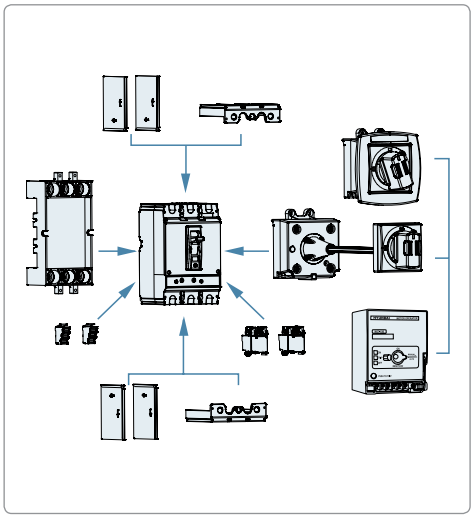

• Terminal

Cage terminal block		3EA/SET	4EA/SET	
		CTB 10B 3S	CTB 10B 4S	
Terminal cover[1]		2 pole	3 pole	4 pole
		TCF 10FP 3	TCF 10FP 3	TCF 10FP 4
Interpole barrier[2]	**2EA/SET**	TQQ 12FG 3PLINE		

※ 1] For both line and load side of breaker, 2EA shall be ordered.
2] Supplied as standard component
Required quantity for both line and load side of breaker: 2 pole 4EA, 3 pole 4EA, 4 pole 6EA

Specifications and Standard Order Codes

▪ Standard order code and unit

• Fixed thermal & fixed instantaneous / Thermal magnetic trip

40/45℃

Model / Breaking capacity at AC380/415V	Rated current	2 pole		3 pole		4 pole		Specification	Category
		Code	Unit (EA)	Code	Unit (EA)	Code	Unit (EA)		
UCB50H 42kA	15A	UCB50H 2PT4S0000C 00015	8	UCB50H 3PT4S0000C 00015	8	UCB50H 4PT4S0000C 00015	6	Screw type terminal connection, No option, 50/60Hz	MCCB /M2
	16A	UCB50H 2PT4S0000C 00016	8	UCB50H 3PT4S0000C 00016	8	UCB50H 4PT4S0000C 00016	6		
	20A	UCB50H 2PT4S0000C 00020	8	UCB50H 3PT4S0000C 00020	8	UCB50H 4PT4S0000C 00020	6		
	25A	UCB50H 2PT4S0000C 00025	8	UCB50H 3PT4S0000C 00025	8	UCB50H 4PT4S0000C 00025	6		
	30A	UCB50H 2PT4S0000C 00030	8	UCB50H 3PT4S0000C 00030	8	UCB50H 4PT4S0000C 00030	6		
	32A	UCB50H 2PT4S0000C 00032	8	UCB50H 3PT4S0000C 00032	8	UCB50H 4PT4S0000C 00032	6		
	40A	UCB50H 2PT4S0000C 00040	8	UCB50H 3PT4S0000C 00040	8	UCB50H 4PT4S0000C 00040	6		
	50A	UCB50H 2PT4S0000C 00050	8	UCB50H 3PT4S0000C 00050	8	UCB50H 4PT4S0000C 00050	6		
UCB50L 50kA	15A	UCB50L 2PT4S0000C 00015	8	UCB50L 3PT4S0000C 00015	8	UCB50L 4PT4S0000C 00015	6		
	16A	UCB50L 2PT4S0000C 00016	8	UCB50L 3PT4S0000C 00016	8	UCB50L 4PT4S0000C 00016	6		
	20A	UCB50L 2PT4S0000C 00020	8	UCB50L 3PT4S0000C 00020	8	UCB50L 4PT4S0000C 00020	6		
	25A	UCB50L 2PT4S0000C 00025	8	UCB50L 3PT4S0000C 00025	8	UCB50L 4PT4S0000C 00025	6		
	30A	UCB50L 2PT4S0000C 00030	8	UCB50L 3PT4S0000C 00030	8	UCB50L 4PT4S0000C 00030	6		
	32A	UCB50L 2PT4S0000C 00032	8	UCB50L 3PT4S0000C 00032	8	UCB50L 4PT4S0000C 00032	6		
	40A	UCB50L 2PT4S0000C 00040	8	UCB50L 3PT4S0000C 00040	8	UCB50L 4PT4S0000C 00040	6		
	50A	UCB50L 2PT4S0000C 00050	8	UCB50L 3PT4S0000C 00050	8	UCB50L 4PT4S0000C 00050	6		

50℃

Model / Breaking capacity at AC380/415V	Rated current	2 pole		3 pole		4 pole		Specification	Category
		Code	Unit (EA)	Code	Unit (EA)	Code	Unit (EA)		
UCB50H 42kA	15A	UCB50H 2PT5S0000C 00015	8	UCB50H 3PT5S0000C 00015	8	UCB50H 4PT5S0000C 00015	6	Screw type terminal connection, No option, 50/60Hz	MCCB /M2
	16A	UCB50H 2PT5S0000C 00016	8	UCB50H 3PT5S0000C 00016	8	UCB50H 4PT5S0000C 00016	6		
	20A	UCB50H 2PT5S0000C 00020	8	UCB50H 3PT5S0000C 00020	8	UCB50H 4PT5S0000C 00020	6		
	25A	UCB50H 2PT5S0000C 00025	8	UCB50H 3PT5S0000C 00025	8	UCB50H 4PT5S0000C 00025	6		
	30A	UCB50H 2PT5S0000C 00030	8	UCB50H 3PT5S0000C 00030	8	UCB50H 4PT5S0000C 00030	6		
	32A	UCB50H 2PT5S0000C 00032	8	UCB50H 3PT5S0000C 00032	8	UCB50H 4PT5S0000C 00032	6		
	40A	UCB50H 2PT5S0000C 00040	8	UCB50H 3PT5S0000C 00040	8	UCB50H 4PT5S0000C 00040	6		
	50A	UCB50H 2PT5S0000C 00050	8	UCB50H 3PT5S0000C 00050	8	UCB50H 4PT5S0000C 00050	6		
UCB50L 50kA	15A	UCB50L 2PT5S0000C 00015	8	UCB50L 3PT5S0000C 00015	8	UCB50L 4PT5S0000C 00015	6		
	16A	UCB50L 2PT5S0000C 00016	8	UCB50L 3PT5S0000C 00016	8	UCB50L 4PT5S0000C 00016	6		
	20A	UCB50L 2PT5S0000C 00020	8	UCB50L 3PT5S0000C 00020	8	UCB50L 4PT5S0000C 00020	6		
	25A	UCB50L 2PT5S0000C 00025	8	UCB50L 3PT5S0000C 00025	8	UCB50L 4PT5S0000C 00025	6		
	30A	UCB50L 2PT5S0000C 00030	8	UCB50L 3PT5S0000C 00030	8	UCB50L 4PT5S0000C 00030	6		
	32A	UCB50L 2PT5S0000C 00032	8	UCB50L 3PT5S0000C 00032	8	UCB50L 4PT5S0000C 00032	6		
	40A	UCB50L 2PT5S0000C 00040	8	UCB50L 3PT5S0000C 00040	8	UCB50L 4PT5S0000C 00040	6		
	50A	UCB50L 2PT5S0000C 00050	8	UCB50L 3PT5S0000C 00050	8	UCB50L 4PT5S0000C 00050	6		

• Adjustable thermal & fixed instantaneous / Thermal magnetic trip

40/45℃

Model / Breaking capacity at AC380/415V	Rated current	2 pole		3 pole		4 pole		Specification	Category
		Code	Unit (EA)	Code	Unit (EA)	Code	Unit (EA)		
UCB50H 42kA	15A	UCB50H 2PT4S0000C 00015F	8	UCB50H 3PT4S0000C 00015F	8	UCB50H 4PT4S0000C 00015F	6	Screw type terminal connection, No option, 50/60Hz	MCCB /M2
	16A	UCB50H 2PT4S0000C 00016F	8	UCB50H 3PT4S0000C 00016F	8	UCB50H 4PT4S0000C 00016F	6		
	20A	UCB50H 2PT4S0000C 00020F	8	UCB50H 3PT4S0000C 00020F	8	UCB50H 4PT4S0000C 00020F	6		
	25A	UCB50H 2PT4S0000C 00025F	8	UCB50H 3PT4S0000C 00025F	8	UCB50H 4PT4S0000C 00025F	6		
	30A	UCB50H 2PT4S0000C 00030F	8	UCB50H 3PT4S0000C 00030F	8	UCB50H 4PT4S0000C 00030F	6		
	32A	UCB50H 2PT4S0000C 00032F	8	UCB50H 3PT4S0000C 00032F	8	UCB50H 4PT4S0000C 00032F	6		
	40A	UCB50H 2PT4S0000C 00040F	8	UCB50H 3PT4S0000C 00040F	8	UCB50H 4PT4S0000C 00040F	6		
	50A	UCB50H 2PT4S0000C 00050F	8	UCB50H 3PT4S0000C 00050F	8	UCB50H 4PT4S0000C 00050F	6		
UCB50L 50kA	15A	UCB50L 2PT4S0000C 00015F	8	UCB50L 3PT4S0000C 00015F	8	UCB50L 4PT4S0000C 00015F	6		
	16A	UCB50L 2PT4S0000C 00016F	8	UCB50L 3PT4S0000C 00016F	8	UCB50L 4PT4S0000C 00016F	6		
	20A	UCB50L 2PT4S0000C 00020F	8	UCB50L 3PT4S0000C 00020F	8	UCB50L 4PT4S0000C 00020F	6		
	25A	UCB50L 2PT4S0000C 00025F	8	UCB50L 3PT4S0000C 00025F	8	UCB50L 4PT4S0000C 00025F	6		
	30A	UCB50L 2PT4S0000C 00030F	8	UCB50L 3PT4S0000C 00030F	8	UCB50L 4PT4S0000C 00030F	6		
	32A	UCB50L 2PT4S0000C 00032F	8	UCB50L 3PT4S0000C 00032F	8	UCB50L 4PT4S0000C 00032F	6		
	40A	UCB50L 2PT4S0000C 00040F	8	UCB50L 3PT4S0000C 00040F	8	UCB50L 4PT4S0000C 00040F	6		
	50A	UCB50L 2PT4S0000C 00050F	8	UCB50L 3PT4S0000C 00050F	8	UCB50L 4PT4S0000C 00050F	6		

50℃

Model / Breaking capacity at AC380/415V	Rated current	2 pole		3 pole		4 pole		Specification	Category
		Code	Unit (EA)	Code	Unit (EA)	Code	Unit (EA)		
UCB50H 42kA	15A	UCB50H 2PT5S0000C 00015F	8	UCB50H 3PT5S0000C 00015F	8	UCB50H 4PT5S0000C 00015F	6	Screw type terminal connection, No option, 50/60Hz	MCCB /M2
	16A	UCB50H 2PT5S0000C 00016F	8	UCB50H 3PT5S0000C 00016F	8	UCB50H 4PT5S0000C 00016F	6		
	20A	UCB50H 2PT5S0000C 00020F	8	UCB50H 3PT5S0000C 00020F	8	UCB50H 4PT5S0000C 00020F	6		
	25A	UCB50H 2PT5S0000C 00025F	8	UCB50H 3PT5S0000C 00025F	8	UCB50H 4PT5S0000C 00025F	6		
	30A	UCB50H 2PT5S0000C 00030F	8	UCB50H 3PT5S0000C 00030F	8	UCB50H 4PT5S0000C 00030F	6		
	32A	UCB50H 2PT5S0000C 00032F	8	UCB50H 3PT5S0000C 00032F	8	UCB50H 4PT5S0000C 00032F	6		
	40A	UCB50H 2PT5S0000C 00040F	8	UCB50H 3PT5S0000C 00040F	8	UCB50H 4PT5S0000C 00040F	6		
	50A	UCB50H 2PT5S0000C 00050F	8	UCB50H 3PT5S0000C 00050F	8	UCB50H 4PT5S0000C 00050F	6		
UCB50L 50kA	15A	UCB50L 2PT5S0000C 00015F	8	UCB50L 3PT5S0000C 00015F	8	UCB50L 4PT5S0000C 00015F	6		
	16A	UCB50L 2PT5S0000C 00016F	8	UCB50L 3PT5S0000C 00016F	8	UCB50L 4PT5S0000C 00016F	6		
	20A	UCB50L 2PT5S0000C 00020F	8	UCB50L 3PT5S0000C 00020F	8	UCB50L 4PT5S0000C 00020F	6		
	25A	UCB50L 2PT5S0000C 00025F	8	UCB50L 3PT5S0000C 00025F	8	UCB50L 4PT5S0000C 00025F	6		
	30A	UCB50L 2PT5S0000C 00030F	8	UCB50L 3PT5S0000C 00030F	8	UCB50L 4PT5S0000C 00030F	6		
	32A	UCB50L 2PT5S0000C 00032F	8	UCB50L 3PT5S0000C 00032F	8	UCB50L 4PT5S0000C 00032F	6		
	40A	UCB50L 2PT5S0000C 00040F	8	UCB50L 3PT5S0000C 00040F	8	UCB50L 4PT5S0000C 00040F	6		
	50A	UCB50L 2PT5S0000C 00050F	8	UCB50L 3PT5S0000C 00050F	8	UCB50L 4PT5S0000C 00050F	6		

Specifications and Standard Order Codes

| UCB type / 100AF |

- UCB100R 30/25kA
- UCB100S 42/36kA

					UCB100R	UCB100S
						
Number of poles (P)					2, 3, 4	
Degree of protection (with terminal cover)					IP20	
Utilization category					A	
Suitability of isolation					○	
Protection					overload, inst., short-circuit	
Rating	Rated current (A)				15,16,20,25,30,32,40,50,60,63,75,80,100,125	
	Rated insulation voltage [Ui] (V)				AC690	
	Rated operational voltage [Ue] (V)				AC660	
					DC250	
	Rated impulse withstand voltage [Uimp] (kV)				6	
Rated short-circuit breaking capacity IEC 60947-2 K 60947-2	Ultimate [Icu] (kA r.m.s.)	AC600/660V, 50-60Hz			10	18
		AC480/500V, 50-60Hz			14	25
		AC440/460V, 50-60Hz			25	35
		AC380/415V, 50-60Hz			30/25	42/36
		AC220/240V, 50-60Hz			50	65
		DC250V			14	18
		DC125V			20	25
	Service [Ics]	% of [Icu]			75	
Trip mechanism & Protection characteristics	Thermal magnetic	Fixed thermal, Fixed instantaneous			○	
				INST	10×In	
		Adjustable thermal, Fixed instantaneous		LTD	(0.8-0.9-1)×In	
				INST	10×In	
Mounting	Direct mounting by screw				○	
	Plug-in	for Switchboard	Both line & load side		○ 1)	
			Line side only		○ 1)	
		for Distribution board			○ 1)	
Terminal connection		Screw			○	
Durability (times)	Mechanical operation				25,000	
	Electrical operation				10,000	
Dimensions (mm) 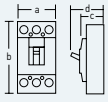		2/3/4P	a	Width	60/90/120	
			b	Height	155	
			c	Depth	60	
			d		84.5	
Weight (kg, breaker only)		2/3/4P			0.7/1.0/1.2	

※ - The breaking capacity highlighted with blue and thick type is standard nominal value for each model in this catalogue.
1) Available for 3P breaker

▪ Accessories

• Signal

Auxiliary switch	1C, left-hand-side					
	AUX 10B L1					
Trip alarm switch	1C, left-hand-side					
	ALT 10B L1					
Shunt trip[1]	DC24V	DC100-110V	AC100-120V	AC200-230V	AC380-415V	AC440-480V
	SHT 10B A	-	SHT 10B F	SHT 10B H		
Under voltage trip[2]	DC24V	DC100-110V	AC100-120V	AC200-230V	AC380-415V	AC440-480V
	UVT 10B J	UVT 10B L	UVT 10B N	UVT 10B P	UVT 10B Q	UVT 10B R

※ 1] The permissible operating voltage: 85-110% of rated voltage for AC , 75-125% for DC
2] The permissible operating voltage: 85-110% of rated voltage(AC), 85-125% of rated voltage(DC)
The tripping voltage: 20-70% of rated voltage(AC/DC)
Be sure not to use UVT for the electrical interlock system.

• Operating

Operating handle[1]	**Power supply direction**		Upper	Right	Left
	Surface	**S type**	TFG 10BS U4	TFG 10BS R4	TFG 10BS L4
		L type	TFG 10BL U4	–	TFG 10BL L4
	Extended	**S type**	TFH 10BS		
		L type	TFH 10BL		
Motor operator[2]			DC24V	AC/DC110V	AC/DC220V
			MOT 10UB DC24	MOT 10UB ADC110	MOT 10UB ADC220
Mechanical interlock			2 pole	3 pole	4 pole
			–	MIF 10UF 3	MIF 10UF 4
Padlock plate[3]			PLD 10UF		

※ 1] For detail type information, please refer to page 195-202.
2] Motor operator is not recommended for marine application.
3] Padlock is not supplied.

• Mounting

Plug-in[1]	**Structure**		For both line & load side	For line side only
	Mounting base		TDM 10BP	TDM 10BF
	Connection block[2]	**2C contact**	CBM 10AB 2	–
		3C contact	CBM 10AB 3	–
	Conn. block barrier		CBM BARR	–

※ 1] Available for 3P breaker
2] Connection blocks are required for internal accessory installation in both line & load side plug-in type 3P breaker.

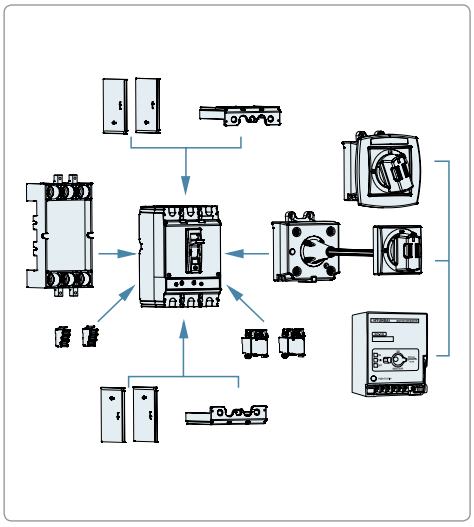

• Terminal

Cage terminal block		3EA/SET	4EA/SET	
		CTB 10B 3S	CTB 10B 4S	
Terminal cover[1]		2 pole	3 pole	4 pole
		TCF 10BP 2	TCF 10BP 3	TCF 10BP 4
Interpole barrier[2]	**2EA/SET**	TQQ 10B 3PLINE		

※ 1] For both line and load side of breaker, 2EA shall be ordered.
2] Supplied as standard component
Required quantity for both line and load side of breaker: 2 pole 2EA, 3 pole 4EA, 4 pole 6EA

Specifications and Standard Order Codes

▪ Standard order code and unit

• Fixed thermal & fixed instantaneous / Thermal magnetic trip

40/45℃

Model / Breaking capacity at AC380/415V	Rated current	2 pole		3 pole		4 pole		Specification	Category
		Code	Unit (EA)	Code	Unit (EA)	Code	Unit (EA)		
UCB100R 30/25kA	15A	UCB100R 2PT4S0000C 00015	16	UCB100R 3PT4S0000C 00015	10	UCB100R 4PT4S0000C 00015	8	Screw type terminal connection, No option, 50/60Hz	MCCB /M2
	16A	UCB100R 2PT4S0000C 00016	16	UCB100R 3PT4S0000C 00016	10	UCB100R 4PT4S0000C 00016	8		
	20A	UCB100R 2PT4S0000C 00020	16	UCB100R 3PT4S0000C 00020	10	UCB100R 4PT4S0000C 00020	8		
	25A	UCB100R 2PT4S0000C 00025	16	UCB100R 3PT4S0000C 00025	10	UCB100R 4PT4S0000C 00025	8		
	30A	UCB100R 2PT4S0000C 00030	16	UCB100R 3PT4S0000C 00030	10	UCB100R 4PT4S0000C 00030	8		
	32A	UCB100R 2PT4S0000C 00032	16	UCB100R 3PT4S0000C 00032	10	UCB100R 4PT4S0000C 00032	8		
	40A	UCB100R 2PT4S0000C 00040	16	UCB100R 3PT4S0000C 00040	10	UCB100R 4PT4S0000C 00040	8		
	50A	UCB100R 2PT4S0000C 00050	16	UCB100R 3PT4S0000C 00050	10	UCB100R 4PT4S0000C 00050	8		
	60A	UCB100R 2PT4S0000C 00060	16	UCB100R 3PT4S0000C 00060	10	UCB100R 4PT4S0000C 00060	8		
	63A	UCB100R 2PT4S0000C 00063	16	UCB100R 3PT4S0000C 00063	10	UCB100R 4PT4S0000C 00063	8		
	75A	UCB100R 2PT4S0000C 00075	16	UCB100R 3PT4S0000C 00075	10	UCB100R 4PT4S0000C 00075	8		
	80A	UCB100R 2PT4S0000C 00080	16	UCB100R 3PT4S0000C 00080	10	UCB100R 4PT4S0000C 00080	8		
	100A	UCB100R 2PT4S0000C 00100	16	UCB100R 3PT4S0000C 00100	10	UCB100R 4PT4S0000C 00100	8		
	125A	UCB100R 2PT4S0000C 00125	16	UCB100R 3PT4S0000C 00125	10	UCB100R 4PT4S0000C 00125	8		
UCB100S 42/36kA	15A	UCB100S 2PT4S0000C 00015	16	UCB100S 3PT4S0000C 00015	10	UCB100S 4PT4S0000C 00015	8		
	16A	UCB100S 2PT4S0000C 00016	16	UCB100S 3PT4S0000C 00016	10	UCB100S 4PT4S0000C 00016	8		
	20A	UCB100S 2PT4S0000C 00020	16	UCB100S 3PT4S0000C 00020	10	UCB100S 4PT4S0000C 00020	8		
	25A	UCB100S 2PT4S0000C 00025	16	UCB100S 3PT4S0000C 00025	10	UCB100S 4PT4S0000C 00025	8		
	30A	UCB100S 2PT4S0000C 00030	16	UCB100S 3PT4S0000C 00030	10	UCB100S 4PT4S0000C 00030	8		
	32A	UCB100S 2PT4S0000C 00032	16	UCB100S 3PT4S0000C 00032	10	UCB100S 4PT4S0000C 00032	8		
	40A	UCB100S 2PT4S0000C 00040	16	UCB100S 3PT4S0000C 00040	10	UCB100S 4PT4S0000C 00040	8		
	50A	UCB100S 2PT4S0000C 00050	16	UCB100S 3PT4S0000C 00050	10	UCB100S 4PT4S0000C 00050	8		
	60A	UCB100S 2PT4S0000C 00060	16	UCB100S 3PT4S0000C 00060	10	UCB100S 4PT4S0000C 00060	8		
	63A	UCB100S 2PT4S0000C 00063	16	UCB100S 3PT4S0000C 00063	10	UCB100S 4PT4S0000C 00063	8		
	75A	UCB100S 2PT4S0000C 00075	16	UCB100S 3PT4S0000C 00075	10	UCB100S 4PT4S0000C 00075	8		
	80A	UCB100S 2PT4S0000C 00080	16	UCB100S 3PT4S0000C 00080	10	UCB100S 4PT4S0000C 00080	8		
	100A	UCB100S 2PT4S0000C 00100	16	UCB100S 3PT4S0000C 00100	10	UCB100S 4PT4S0000C 00100	8		
	125A	UCB100S 2PT4S0000C 00125	16	UCB100S 3PT4S0000C 00125	10	UCB100S 4PT4S0000C 00125	8		

50℃

Model / Breaking capacity at AC380/415V	Rated current	2 pole		3 pole		4 pole		Specification	Category
		Code	Unit (EA)	Code	Unit (EA)	Code	Unit (EA)		
UCB100R 30/25kA	15A	UCB100R 2PT5S0000C 00015	16	UCB100R 3PT5S0000C 00015	10	UCB100R 4PT5S0000C 00015	8	Screw type terminal connection, No option, 50/60Hz	MCCB /M2
	16A	UCB100R 2PT5S0000C 00016	16	UCB100R 3PT5S0000C 00016	10	UCB100R 4PT5S0000C 00016	8		
	20A	UCB100R 2PT5S0000C 00020	16	UCB100R 3PT5S0000C 00020	10	UCB100R 4PT5S0000C 00020	8		
	25A	UCB100R 2PT5S0000C 00025	16	UCB100R 3PT5S0000C 00025	10	UCB100R 4PT5S0000C 00025	8		
	30A	UCB100R 2PT5S0000C 00030	16	UCB100R 3PT5S0000C 00030	10	UCB100R 4PT5S0000C 00030	8		
	32A	UCB100R 2PT5S0000C 00032	16	UCB100R 3PT5S0000C 00032	10	UCB100R 4PT5S0000C 00032	8		
	40A	UCB100R 2PT5S0000C 00040	16	UCB100R 3PT5S0000C 00040	10	UCB100R 4PT5S0000C 00040	8		
	50A	UCB100R 2PT5S0000C 00050	16	UCB100R 3PT5S0000C 00050	10	UCB100R 4PT5S0000C 00050	8		
	60A	UCB100R 2PT5S0000C 00060	16	UCB100R 3PT5S0000C 00060	10	UCB100R 4PT5S0000C 00060	8		
	63A	UCB100R 2PT5S0000C 00063	16	UCB100R 3PT5S0000C 00063	10	UCB100R 4PT5S0000C 00063	8		
	75A	UCB100R 2PT5S0000C 00075	16	UCB100R 3PT5S0000C 00075	10	UCB100R 4PT5S0000C 00075	8		
	80A	UCB100R 2PT5S0000C 00080	16	UCB100R 3PT5S0000C 00080	10	UCB100R 4PT5S0000C 00080	8		
	100A	UCB100R 2PT5S0000C 00100	16	UCB100R 3PT5S0000C 00100	10	UCB100R 4PT5S0000C 00100	8		
	125A	UCB100R 2PT5S0000C 00125	16	UCB100R 3PT5S0000C 00125	10	UCB100R 4PT5S0000C 00125	8		
UCB100S 42/36kA	15A	UCB100S 2PT5S0000C 00015	16	UCB100S 3PT5S0000C 00015	10	UCB100S 4PT5S0000C 00015	8		
	16A	UCB100S 2PT5S0000C 00016	16	UCB100S 3PT5S0000C 00016	10	UCB100S 4PT5S0000C 00016	8		
	20A	UCB100S 2PT5S0000C 00020	16	UCB100S 3PT5S0000C 00020	10	UCB100S 4PT5S0000C 00020	8		
	25A	UCB100S 2PT5S0000C 00025	16	UCB100S 3PT5S0000C 00025	10	UCB100S 4PT5S0000C 00025	8		
	30A	UCB100S 2PT5S0000C 00030	16	UCB100S 3PT5S0000C 00030	10	UCB100S 4PT5S0000C 00030	8		
	32A	UCB100S 2PT5S0000C 00032	16	UCB100S 3PT5S0000C 00032	10	UCB100S 4PT5S0000C 00032	8		
	40A	UCB100S 2PT5S0000C 00040	16	UCB100S 3PT5S0000C 00040	10	UCB100S 4PT5S0000C 00040	8		
	50A	UCB100S 2PT5S0000C 00050	16	UCB100S 3PT5S0000C 00050	10	UCB100S 4PT5S0000C 00050	8		
	60A	UCB100S 2PT5S0000C 00060	16	UCB100S 3PT5S0000C 00060	10	UCB100S 4PT5S0000C 00060	8		
	63A	UCB100S 2PT5S0000C 00063	16	UCB100S 3PT5S0000C 00063	10	UCB100S 4PT5S0000C 00063	8		
	75A	UCB100S 2PT5S0000C 00075	16	UCB100S 3PT5S0000C 00075	10	UCB100S 4PT5S0000C 00075	8		
	80A	UCB100S 2PT5S0000C 00080	16	UCB100S 3PT5S0000C 00080	10	UCB100S 4PT5S0000C 00080	8		
	100A	UCB100S 2PT5S0000C 00100	16	UCB100S 3PT5S0000C 00100	10	UCB100S 4PT5S0000C 00100	8		
	125A	UCB100S 2PT5S0000C 00125	16	UCB100S 3PT5S0000C 00125	10	UCB100S 4PT5S0000C 00125	8		

• Adjustable thermal & fixed instantaneous / Thermal magnetic trip

40/45℃

Model / Breaking capacity at AC380/415V	Rated current	2 pole		3 pole		4 pole		Specification	Category
		Code	Unit (EA)	Code	Unit (EA)	Code	Unit (EA)		
UCB100R 30/25kA	15A	UCB100R 2PT4S0000C 00015F	16	UCB100R 3PT4S0000C 00015F	10	UCB100R 4PT4S0000C 00015F	8	Screw type terminal connection, No option, 50/60Hz	MCCB /M2
	16A	UCB100R 2PT4S0000C 00016F	16	UCB100R 3PT4S0000C 00016F	10	UCB100R 4PT4S0000C 00016F	8		
	20A	UCB100R 2PT4S0000C 00020F	16	UCB100R 3PT4S0000C 00020F	10	UCB100R 4PT4S0000C 00020F	8		
	25A	UCB100R 2PT4S0000C 00025F	16	UCB100R 3PT4S0000C 00025F	10	UCB100R 4PT4S0000C 00025F	8		
	30A	UCB100R 2PT4S0000C 00030F	16	UCB100R 3PT4S0000C 00030F	10	UCB100R 4PT4S0000C 00030F	8		
	32A	UCB100R 2PT4S0000C 00032F	16	UCB100R 3PT4S0000C 00032F	10	UCB100R 4PT4S0000C 00032F	8		
	40A	UCB100R 2PT4S0000C 00040F	16	UCB100R 3PT4S0000C 00040F	10	UCB100R 4PT4S0000C 00040F	8		
	50A	UCB100R 2PT4S0000C 00050F	16	UCB100R 3PT4S0000C 00050F	10	UCB100R 4PT4S0000C 00050F	8		
	60A	UCB100R 2PT4S0000C 00060F	16	UCB100R 3PT4S0000C 00060F	10	UCB100R 4PT4S0000C 00060F	8		
	63A	UCB100R 2PT4S0000C 00063F	16	UCB100R 3PT4S0000C 00063F	10	UCB100R 4PT4S0000C 00063F	8		
	75A	UCB100R 2PT4S0000C 00075F	16	UCB100R 3PT4S0000C 00075F	10	UCB100R 4PT4S0000C 00075F	8		
	80A	UCB100R 2PT4S0000C 00080F	16	UCB100R 3PT4S0000C 00080F	10	UCB100R 4PT4S0000C 00080F	8		
	100A	UCB100R 2PT4S0000C 00100F	16	UCB100R 3PT4S0000C 00100F	10	UCB100R 4PT4S0000C 00100F	8		
	125A	UCB100R 2PT4S0000C 00125F	16	UCB100R 3PT4S0000C 00125F	10	UCB100R 4PT4S0000C 00125F	8		
UCB100S 42/36kA	15A	UCB100S 2PT4S0000C 00015F	16	UCB100S 3PT4S0000C 00015F	10	UCB100S 4PT4S0000C 00015F	8		
	16A	UCB100S 2PT4S0000C 00016F	16	UCB100S 3PT4S0000C 00016F	10	UCB100S 4PT4S0000C 00016F	8		
	20A	UCB100S 2PT4S0000C 00020F	16	UCB100S 3PT4S0000C 00020F	10	UCB100S 4PT4S0000C 00020F	8		
	25A	UCB100S 2PT4S0000C 00025F	16	UCB100S 3PT4S0000C 00025F	10	UCB100S 4PT4S0000C 00025F	8		
	30A	UCB100S 2PT4S0000C 00030F	16	UCB100S 3PT4S0000C 00030F	10	UCB100S 4PT4S0000C 00030F	8		
	32A	UCB100S 2PT4S0000C 00032F	16	UCB100S 3PT4S0000C 00032F	10	UCB100S 4PT4S0000C 00032F	8		
	40A	UCB100S 2PT4S0000C 00040F	16	UCB100S 3PT4S0000C 00040F	10	UCB100S 4PT4S0000C 00040F	8		
	50A	UCB100S 2PT4S0000C 00050F	16	UCB100S 3PT4S0000C 00050F	10	UCB100S 4PT4S0000C 00050F	8		
	60A	UCB100S 2PT4S0000C 00060F	16	UCB100S 3PT4S0000C 00060F	10	UCB100S 4PT4S0000C 00060F	8		
	63A	UCB100S 2PT4S0000C 00063F	16	UCB100S 3PT4S0000C 00063F	10	UCB100S 4PT4S0000C 00063F	8		
	75A	UCB100S 2PT4S0000C 00075F	16	UCB100S 3PT4S0000C 00075F	10	UCB100S 4PT4S0000C 00075F	8		
	80A	UCB100S 2PT4S0000C 00080F	16	UCB100S 3PT4S0000C 00080F	10	UCB100S 4PT4S0000C 00080F	8		
	100A	UCB100S 2PT4S0000C 00100F	16	UCB100S 3PT4S0000C 00100F	10	UCB100S 4PT4S0000C 00100F	8		
	125A	UCB100S 2PT4S0000C 00125F	16	UCB100S 3PT4S0000C 00125F	10	UCB100S 4PT4S0000C 00125F	8		

50℃

Model / Breaking capacity at AC380/415V	Rated current	2 pole		3 pole		4 pole		Specification	Category
		Code	Unit (EA)	Code	Unit (EA)	Code	Unit (EA)		
UCB100R 30/25kA	15A	UCB100R 2PT5S0000C 00015F	16	UCB100R 3PT5S0000C 00015F	10	UCB100R 4PT5S0000C 00015F	8	Screw type terminal connection, No option, 50/60Hz	MCCB /M2
	16A	UCB100R 2PT5S0000C 00016F	16	UCB100R 3PT5S0000C 00016F	10	UCB100R 4PT5S0000C 00016F	8		
	20A	UCB100R 2PT5S0000C 00020F	16	UCB100R 3PT5S0000C 00020F	10	UCB100R 4PT5S0000C 00020F	8		
	25A	UCB100R 2PT5S0000C 00025F	16	UCB100R 3PT5S0000C 00025F	10	UCB100R 4PT5S0000C 00025F	8		
	30A	UCB100R 2PT5S0000C 00030F	16	UCB100R 3PT5S0000C 00030F	10	UCB100R 4PT5S0000C 00030F	8		
	32A	UCB100R 2PT5S0000C 00032F	16	UCB100R 3PT5S0000C 00032F	10	UCB100R 4PT5S0000C 00032F	8		
	40A	UCB100R 2PT5S0000C 00040F	16	UCB100R 3PT5S0000C 00040F	10	UCB100R 4PT5S0000C 00040F	8		
	50A	UCB100R 2PT5S0000C 00050F	16	UCB100R 3PT5S0000C 00050F	10	UCB100R 4PT5S0000C 00050F	8		
	60A	UCB100R 2PT5S0000C 00060F	16	UCB100R 3PT5S0000C 00060F	10	UCB100R 4PT5S0000C 00060F	8		
	63A	UCB100R 2PT5S0000C 00063F	16	UCB100R 3PT5S0000C 00063F	10	UCB100R 4PT5S0000C 00063F	8		
	75A	UCB100R 2PT5S0000C 00075F	16	UCB100R 3PT5S0000C 00075F	10	UCB100R 4PT5S0000C 00075F	8		
	80A	UCB100R 2PT5S0000C 00080F	16	UCB100R 3PT5S0000C 00080F	10	UCB100R 4PT5S0000C 00080F	8		
	100A	UCB100R 2PT5S0000C 00100F	16	UCB100R 3PT5S0000C 00100F	10	UCB100R 4PT5S0000C 00100F	8		
	125A	UCB100R 2PT5S0000C 00125F	16	UCB100R 3PT5S0000C 00125F	10	UCB100R 4PT5S0000C 00125F	8		
UCB100S 42/36kA	15A	UCB100S 2PT5S0000C 00015F	16	UCB100S 3PT5S0000C 00015F	10	UCB100S 4PT5S0000C 00015F	8		
	16A	UCB100S 2PT5S0000C 00016F	16	UCB100S 3PT5S0000C 00016F	10	UCB100S 4PT5S0000C 00016F	8		
	20A	UCB100S 2PT5S0000C 00020F	16	UCB100S 3PT5S0000C 00020F	10	UCB100S 4PT5S0000C 00020F	8		
	25A	UCB100S 2PT5S0000C 00025F	16	UCB100S 3PT5S0000C 00025F	10	UCB100S 4PT5S0000C 00025F	8		
	30A	UCB100S 2PT5S0000C 00030F	16	UCB100S 3PT5S0000C 00030F	10	UCB100S 4PT5S0000C 00030F	8		
	32A	UCB100S 2PT5S0000C 00032F	16	UCB100S 3PT5S0000C 00032F	10	UCB100S 4PT5S0000C 00032F	8		
	40A	UCB100S 2PT5S0000C 00040F	16	UCB100S 3PT5S0000C 00040F	10	UCB100S 4PT5S0000C 00040F	8		
	50A	UCB100S 2PT5S0000C 00050F	16	UCB100S 3PT5S0000C 00050F	10	UCB100S 4PT5S0000C 00050F	8		
	60A	UCB100S 2PT5S0000C 00060F	16	UCB100S 3PT5S0000C 00060F	10	UCB100S 4PT5S0000C 00060F	8		
	63A	UCB100S 2PT5S0000C 00063F	16	UCB100S 3PT5S0000C 00063F	10	UCB100S 4PT5S0000C 00063F	8		
	75A	UCB100S 2PT5S0000C 00075F	16	UCB100S 3PT5S0000C 00075F	10	UCB100S 4PT5S0000C 00075F	8		
	80A	UCB100S 2PT5S0000C 00080F	16	UCB100S 3PT5S0000C 00080F	10	UCB100S 4PT5S0000C 00080F	8		
	100A	UCB100S 2PT5S0000C 00100F	16	UCB100S 3PT5S0000C 00100F	10	UCB100S 4PT5S0000C 00100F	8		
	125A	UCB100S 2PT5S0000C 00125F	16	UCB100S 3PT5S0000C 00125F	10	UCB100S 4PT5S0000C 00125F	8		

Specifications and Standard Order Codes

| UCB type / 125AF |

- UCB100H 42kA
- UCB100L 50kA

					UCB100H	UCB100L
						
Number of poles (P)					∗2, 3, 4	
Degree of protection (with terminal cover)					IP20	
Utilization category					A	
Suitability of isolation					○	
Protection					overload, inst., short-circuit	
Rating	Rated current (A)				15,16,20,25,30,32,40,50,60,63,75,80,100,125	
	Rated insulation voltage [Ui] (V)				AC690	
	Rated operational voltage [Ue] (V)				AC660	
					DC250	
	Rated impulse withstand voltage [Uimp] (kV)				6	
Rated short-circuit breaking capacity IEC 60947-2 K 60947-2	Ultimate [Icu] (kA r.m.s.)	AC600/660V, 50-60Hz			20	25
		AC480/500V, 50-60Hz			30	35
		AC440/460V, 50-60Hz			42	50
		AC380/415V, 50-60Hz			42	50
		AC220/240V, 50-60Hz			85	100
		DC250V			25	40
		DC125V			40	60
	Service [Ics]	% of [Icu]			75	
Trip mechanism & Protection characteristics	Thermal magnetic	Fixed thermal, Fixed instantaneous			○	
				INST	15-32A: 15×In, 40-125A: 10×In	
		Adjustable thermal, Fixed instantaneous		LTD	(0.8-0.9-1)×In	
				INST	15-32A: 15×In, 40-125A: 10×In	
Mounting	Direct mounting by screw				○	
	Plug-in	for Switchboard	Both line & load side		○ [1]	
			Line side only		○ [1]	
		for Distribution board			○ [1]	
Terminal connection		Screw			○	
Durability (times)	Mechanical operation				25,000	
	Electrical operation				10,000	
Dimensions (mm) 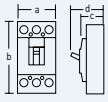		2/3/4P	a	Width	90[2]/90/120	
			b	Height	155	
			c	Depth	60	
			d		84.5	
Weight (kg, breaker only)		2/3/4P			0.9/1.0/1.3	

※ - The breaking capacity highlighted with blue and thick type is standard nominal value for each model in this catalogue.
1] Available for 3P breaker
2] ∗2P breaker has same dimension as 3P breaker, but the middle pole is removed.

▪ Accessories

• Signal

Auxiliary switch	1C, left-hand-side	2C, left-hand-side				
	AUX 12FG L1	AUX 12FG L2				
Trip alarm switch	1C, right-hand-side	1C, left-hand-side				
	ALT 12FG R1	ALT 12FG L1				
Shunt trip[1]	DC24V	DC100-110V	AC100-120V	AC200-230V	AC380-415V	AC440-480V
	SHT 12FG A	SHT 12FG C	SHT 12FG F	SHT 12FG H	SHT 12FG B	SHT 12FG D
Under voltage trip[2]	DC24V	DC100-110V	AC100-120V	AC200-230V	AC380-415V	AC440-480V
	UVT 12FG J	UVT 12FG L	UVT 12FG N	UVT 12FG P	UVT 12FG Q	UVT 12FG R

※ 1] The permissible operating voltage: 85-110% of rated voltage for AC , 75-125% for DC
2] The permissible operating voltage: 85-110% of rated voltage(AC), 85-125% of rated voltage(DC)
The tripping voltage: 20-70% of rated voltage(AC/DC)
Be sure not to use UVT for the electrical interlock system.

• Operating

Operating handle[1]	**Power supply direction**		Upper	Right	Left
	Surface	**S type**	TFG 10UFS U4	TFG 10UFS R4	TFG 10UFS L4
		L type	TFG 10UFL U4	–	TFG 10UFL L4
	Extended	**S type**	TFH 10UFS		
		L type	TFH 10UFL		
Motor operator[2]	DC24V		AC/DC110V		AC/DC220V
	MOT 10F DC24		MOT 10F ADC110		MOT 10F ADC220
Mechanical interlock	2 pole		3 pole		4 pole
	MIF 10UF 3		MIF 10UF 3		MIF 10UF 4
Padlock plate[3]	PLD 10UF				

※ 1] For detail type information, please refer to page 195-202.
2] Motor operator is not recommended for marine application.
3] Padlock is not supplied.

• Mounting

Plug-in[1]	**Structure**		For both line & load side	For line side only
	Mounting base		TDM 10BP	TDM 10BF
	Connection block[2]	**2C contact**	CBM 10AB 2	–
		3C contact	CBM 10AB 3	–
	Conn. block barrier		CBM BARR	–

※ 1] Available for 3P breaker
2] Connection blocks are required for internal accessory installation in both line & load side plug-in type 3P breaker.

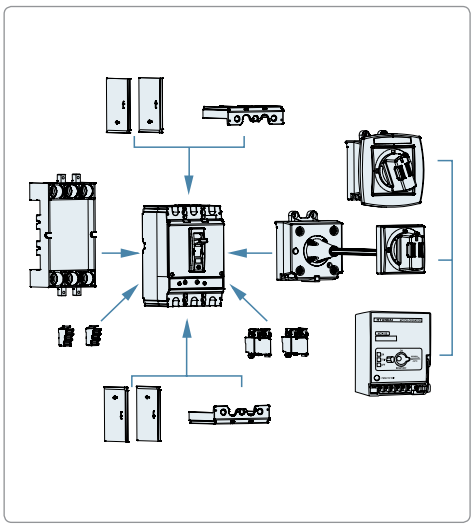

• Terminal

Cage terminal block	3EA/SET	4EA/SET		
	CTB 10B 3S	CTB 10B 4S		
Terminal cover[1]	2 pole	3 pole	4 pole	
	TCF 10FP 3	TCF 10FP 3	TCF 10FP 4	
Interpole barrier[2]	**2EA/SET**	TQQ 12FG 3PLINE		

※ 1] For both line and load side of breaker, 2EA shall be ordered.
2] Supplied as standard component
Required quantity for both line and load side of breaker: 2 pole 2EA, 3 pole 4EA, 4 pole 6EA

Specifications and Standard Order Codes

▪ Standard order code and unit

• Fixed thermal & fixed instantaneous / Thermal magnetic trip

40/45℃

Model / Breaking capacity at AC380/415V	Rated current	2 pole		3 pole		4 pole		Specification	Category
		Code	Unit (EA)	Code	Unit (EA)	Code	Unit (EA)		
UCB100H 42kA	15A	UCB100H 2PT4S0000C 00015	8	UCB100H 3PT4S0000C 00015	8	UCB100H 4PT4S0000C 00015	6	Screw type terminal connection, No option, 50/60Hz	MCCB /M2
	16A	UCB100H 2PT4S0000C 00016	8	UCB100H 3PT4S0000C 00016	8	UCB100H 4PT4S0000C 00016	6		
	20A	UCB100H 2PT4S0000C 00020	8	UCB100H 3PT4S0000C 00020	8	UCB100H 4PT4S0000C 00020	6		
	25A	UCB100H 2PT4S0000C 00025	8	UCB100H 3PT4S0000C 00025	8	UCB100H 4PT4S0000C 00025	6		
	30A	UCB100H 2PT4S0000C 00030	8	UCB100H 3PT4S0000C 00030	8	UCB100H 4PT4S0000C 00030	6		
	32A	UCB100H 2PT4S0000C 00032	8	UCB100H 3PT4S0000C 00032	8	UCB100H 4PT4S0000C 00032	6		
	40A	UCB100H 2PT4S0000C 00040	8	UCB100H 3PT4S0000C 00040	8	UCB100H 4PT4S0000C 00040	6		
	50A	UCB100H 2PT4S0000C 00050	8	UCB100H 3PT4S0000C 00050	8	UCB100H 4PT4S0000C 00050	6		
	60A	UCB100H 2PT4S0000C 00060	8	UCB100H 3PT4S0000C 00060	8	UCB100H 4PT4S0000C 00060	6		
	63A	UCB100H 2PT4S0000C 00063	8	UCB100H 3PT4S0000C 00063	8	UCB100H 4PT4S0000C 00063	6		
	75A	UCB100H 2PT4S0000C 00075	8	UCB100H 3PT4S0000C 00075	8	UCB100H 4PT4S0000C 00075	6		
	80A	UCB100H 2PT4S0000C 00080	8	UCB100H 3PT4S0000C 00080	8	UCB100H 4PT4S0000C 00080	6		
	100A	UCB100H 2PT4S0000C 00100	8	UCB100H 3PT4S0000C 00100	8	UCB100H 4PT4S0000C 00100	6		
	125A	UCB100H 2PT4S0000C 00125	8	UCB100H 3PT4S0000C 00125	8	UCB100H 4PT4S0000C 00125	6		
UCB100L 50kA	15A	UCB100L 2PT4S0000C 00015	8	UCB100L 3PT4S0000C 00015	8	UCB100L 4PT4S0000C 00015	6		
	16A	UCB100L 2PT4S0000C 00016	8	UCB100L 3PT4S0000C 00016	8	UCB100L 4PT4S0000C 00016	6		
	20A	UCB100L 2PT4S0000C 00020	8	UCB100L 3PT4S0000C 00020	8	UCB100L 4PT4S0000C 00020	6		
	25A	UCB100L 2PT4S0000C 00025	8	UCB100L 3PT4S0000C 00025	8	UCB100L 4PT4S0000C 00025	6		
	30A	UCB100L 2PT4S0000C 00030	8	UCB100L 3PT4S0000C 00030	8	UCB100L 4PT4S0000C 00030	6		
	32A	UCB100L 2PT4S0000C 00032	8	UCB100L 3PT4S0000C 00032	8	UCB100L 4PT4S0000C 00032	6		
	40A	UCB100L 2PT4S0000C 00040	8	UCB100L 3PT4S0000C 00040	8	UCB100L 4PT4S0000C 00040	6		
	50A	UCB100L 2PT4S0000C 00050	8	UCB100L 3PT4S0000C 00050	8	UCB100L 4PT4S0000C 00050	6		
	60A	UCB100L 2PT4S0000C 00060	8	UCB100L 3PT4S0000C 00060	8	UCB100L 4PT4S0000C 00060	6		
	63A	UCB100L 2PT4S0000C 00063	8	UCB100L 3PT4S0000C 00063	8	UCB100L 4PT4S0000C 00063	6		
	75A	UCB100L 2PT4S0000C 00075	8	UCB100L 3PT4S0000C 00075	8	UCB100L 4PT4S0000C 00075	6		
	80A	UCB100L 2PT4S0000C 00080	8	UCB100L 3PT4S0000C 00080	8	UCB100L 4PT4S0000C 00080	6		
	100A	UCB100L 2PT4S0000C 00100	8	UCB100L 3PT4S0000C 00100	8	UCB100L 4PT4S0000C 00100	6		
	125A	UCB100L 2PT4S0000C 00125	8	UCB100L 3PT4S0000C 00125	8	UCB100L 4PT4S0000C 00125	6		

50℃

Model / Breaking capacity at AC380/415V	Rated current	2 pole		3 pole		4 pole		Specification	Category
		Code	Unit (EA)	Code	Unit (EA)	Code	Unit (EA)		
UCB100H 42kA	15A	UCB100H 2PT5S0000C 00015	8	UCB100H 3PT5S0000C 00015	8	UCB100H 4PT5S0000C 00015	6	Screw type terminal connection, No option, 50/60Hz	MCCB /M2
	16A	UCB100H 2PT5S0000C 00016	8	UCB100H 3PT5S0000C 00016	8	UCB100H 4PT5S0000C 00016	6		
	20A	UCB100H 2PT5S0000C 00020	8	UCB100H 3PT5S0000C 00020	8	UCB100H 4PT5S0000C 00020	6		
	25A	UCB100H 2PT5S0000C 00025	8	UCB100H 3PT5S0000C 00025	8	UCB100H 4PT5S0000C 00025	6		
	30A	UCB100H 2PT5S0000C 00030	8	UCB100H 3PT5S0000C 00030	8	UCB100H 4PT5S0000C 00030	6		
	32A	UCB100H 2PT5S0000C 00032	8	UCB100H 3PT5S0000C 00032	8	UCB100H 4PT5S0000C 00032	6		
	40A	UCB100H 2PT5S0000C 00040	8	UCB100H 3PT5S0000C 00040	8	UCB100H 4PT5S0000C 00040	6		
	50A	UCB100H 2PT5S0000C 00050	8	UCB100H 3PT5S0000C 00050	8	UCB100H 4PT5S0000C 00050	6		
	60A	UCB100H 2PT5S0000C 00060	8	UCB100H 3PT5S0000C 00060	8	UCB100H 4PT5S0000C 00060	6		
	63A	UCB100H 2PT5S0000C 00063	8	UCB100H 3PT5S0000C 00063	8	UCB100H 4PT5S0000C 00063	6		
	75A	UCB100H 2PT5S0000C 00075	8	UCB100H 3PT5S0000C 00075	8	UCB100H 4PT5S0000C 00075	6		
	80A	UCB100H 2PT5S0000C 00080	8	UCB100H 3PT5S0000C 00080	8	UCB100H 4PT5S0000C 00080	6		
	100A	UCB100H 2PT5S0000C 00100	8	UCB100H 3PT5S0000C 00100	8	UCB100H 4PT5S0000C 00100	6		
	125A	UCB100H 2PT5S0000C 00125	8	UCB100H 3PT5S0000C 00125	8	UCB100H 4PT5S0000C 00125	6		
UCB100L 50kA	15A	UCB100L 2PT5S0000C 00015	8	UCB100L 3PT5S0000C 00015	8	UCB100L 4PT5S0000C 00015	6		
	16A	UCB100L 2PT5S0000C 00016	8	UCB100L 3PT5S0000C 00016	8	UCB100L 4PT5S0000C 00016	6		
	20A	UCB100L 2PT5S0000C 00020	8	UCB100L 3PT5S0000C 00020	8	UCB100L 4PT5S0000C 00020	6		
	25A	UCB100L 2PT5S0000C 00025	8	UCB100L 3PT5S0000C 00025	8	UCB100L 4PT5S0000C 00025	6		
	30A	UCB100L 2PT5S0000C 00030	8	UCB100L 3PT5S0000C 00030	8	UCB100L 4PT5S0000C 00030	6		
	32A	UCB100L 2PT5S0000C 00032	8	UCB100L 3PT5S0000C 00032	8	UCB100L 4PT5S0000C 00032	6		
	40A	UCB100L 2PT5S0000C 00040	8	UCB100L 3PT5S0000C 00040	8	UCB100L 4PT5S0000C 00040	6		
	50A	UCB100L 2PT5S0000C 00050	8	UCB100L 3PT5S0000C 00050	8	UCB100L 4PT5S0000C 00050	6		
	60A	UCB100L 2PT5S0000C 00060	8	UCB100L 3PT5S0000C 00060	8	UCB100L 4PT5S0000C 00060	6		
	63A	UCB100L 2PT5S0000C 00063	8	UCB100L 3PT5S0000C 00063	8	UCB100L 4PT5S0000C 00063	6		
	75A	UCB100L 2PT5S0000C 00075	8	UCB100L 3PT5S0000C 00075	8	UCB100L 4PT5S0000C 00075	6		
	80A	UCB100L 2PT5S0000C 00080	8	UCB100L 3PT5S0000C 00080	8	UCB100L 4PT5S0000C 00080	6		
	100A	UCB100L 2PT5S0000C 00100	8	UCB100L 3PT5S0000C 00100	8	UCB100L 4PT5S0000C 00100	6		
	125A	UCB100L 2PT5S0000C 00125	8	UCB100L 3PT5S0000C 00125	8	UCB100L 4PT5S0000C 00125	6		

• Adjustable thermal & fixed instantaneous / Thermal magnetic trip

40/45℃

Model / Breaking capacity at AC380/415V	Rated current	2 pole		3 pole		4 pole		Specification	Category
		Code	Unit (EA)	Code	Unit (EA)	Code	Unit (EA)		
UCB100H 42kA	15A	UCB100H 2PT4S0000C 00015F	8	UCB100H 3PT4S0000C 00015F	8	UCB100H 4PT4S0000C 00015F	6	Screw type terminal connection, No option, 50/60Hz	MCCB /M2
	16A	UCB100H 2PT4S0000C 00016F	8	UCB100H 3PT4S0000C 00016F	8	UCB100H 4PT4S0000C 00016F	6		
	20A	UCB100H 2PT4S0000C 00020F	8	UCB100H 3PT4S0000C 00020F	8	UCB100H 4PT4S0000C 00020F	6		
	25A	UCB100H 2PT4S0000C 00025F	8	UCB100H 3PT4S0000C 00025F	8	UCB100H 4PT4S0000C 00025F	6		
	30A	UCB100H 2PT4S0000C 00030F	8	UCB100H 3PT4S0000C 00030F	8	UCB100H 4PT4S0000C 00030F	6		
	32A	UCB100H 2PT4S0000C 00032F	8	UCB100H 3PT4S0000C 00032F	8	UCB100H 4PT4S0000C 00032F	6		
	40A	UCB100H 2PT4S0000C 00040F	8	UCB100H 3PT4S0000C 00040F	8	UCB100H 4PT4S0000C 00040F	6		
	50A	UCB100H 2PT4S0000C 00050F	8	UCB100H 3PT4S0000C 00050F	8	UCB100H 4PT4S0000C 00050F	6		
	60A	UCB100H 2PT4S0000C 00060F	8	UCB100H 3PT4S0000C 00060F	8	UCB100H 4PT4S0000C 00060F	6		
	63A	UCB100H 2PT4S0000C 00063F	8	UCB100H 3PT4S0000C 00063F	8	UCB100H 4PT4S0000C 00063F	6		
	75A	UCB100H 2PT4S0000C 00075F	8	UCB100H 3PT4S0000C 00075F	8	UCB100H 4PT4S0000C 00075F	6		
	80A	UCB100H 2PT4S0000C 00080F	8	UCB100H 3PT4S0000C 00080F	8	UCB100H 4PT4S0000C 00080F	6		
	100A	UCB100H 2PT4S0000C 00100F	8	UCB100H 3PT4S0000C 00100F	8	UCB100H 4PT4S0000C 00100F	6		
	125A	UCB100H 2PT4S0000C 00125F	8	UCB100H 3PT4S0000C 00125F	8	UCB100H 4PT4S0000C 00125F	6		
UCB100L 50kA	15A	UCB100L 2PT4S0000C 00015F	8	UCB100L 3PT4S0000C 00015F	8	UCB100L 4PT4S0000C 00015F	6		
	16A	UCB100L 2PT4S0000C 00016F	8	UCB100L 3PT4S0000C 00016F	8	UCB100L 4PT4S0000C 00016F	6		
	20A	UCB100L 2PT4S0000C 00020F	8	UCB100L 3PT4S0000C 00020F	8	UCB100L 4PT4S0000C 00020F	6		
	25A	UCB100L 2PT4S0000C 00025F	8	UCB100L 3PT4S0000C 00025F	8	UCB100L 4PT4S0000C 00025F	6		
	30A	UCB100L 2PT4S0000C 00030F	8	UCB100L 3PT4S0000C 00030F	8	UCB100L 4PT4S0000C 00030F	6		
	32A	UCB100L 2PT4S0000C 00032F	8	UCB100L 3PT4S0000C 00032F	8	UCB100L 4PT4S0000C 00032F	6		
	40A	UCB100L 2PT4S0000C 00040F	8	UCB100L 3PT4S0000C 00040F	8	UCB100L 4PT4S0000C 00040F	6		
	50A	UCB100L 2PT4S0000C 00050F	8	UCB100L 3PT4S0000C 00050F	8	UCB100L 4PT4S0000C 00050F	6		
	60A	UCB100L 2PT4S0000C 00060F	8	UCB100L 3PT4S0000C 00060F	8	UCB100L 4PT4S0000C 00060F	6		
	63A	UCB100L 2PT4S0000C 00063F	8	UCB100L 3PT4S0000C 00063F	8	UCB100L 4PT4S0000C 00063F	6		
	75A	UCB100L 2PT4S0000C 00075F	8	UCB100L 3PT4S0000C 00075F	8	UCB100L 4PT4S0000C 00075F	6		
	80A	UCB100L 2PT4S0000C 00080F	8	UCB100L 3PT4S0000C 00080F	8	UCB100L 4PT4S0000C 00080F	6		
	100A	UCB100L 2PT4S0000C 00100F	8	UCB100L 3PT4S0000C 00100F	8	UCB100L 4PT4S0000C 00100F	6		
	125A	UCB100L 2PT4S0000C 00125F	8	UCB100L 3PT4S0000C 00125F	8	UCB100L 4PT4S0000C 00125F	6		

50℃

Model / Breaking capacity at AC380/415V	Rated current	2 pole		3 pole		4 pole		Specification	Category
		Code	Unit (EA)	Code	Unit (EA)	Code	Unit (EA)		
UCB100H 42kA	15A	UCB100H 2PT5S0000C 00015F	8	UCB100H 3PT5S0000C 00015F	8	UCB100H 4PT5S0000C 00015F	6	Screw type terminal connection, No option, 50/60Hz	MCCB /M2
	16A	UCB100H 2PT5S0000C 00016F	8	UCB100H 3PT5S0000C 00016F	8	UCB100H 4PT5S0000C 00016F	6		
	20A	UCB100H 2PT5S0000C 00020F	8	UCB100H 3PT5S0000C 00020F	8	UCB100H 4PT5S0000C 00020F	6		
	25A	UCB100H 2PT5S0000C 00025F	8	UCB100H 3PT5S0000C 00025F	8	UCB100H 4PT5S0000C 00025F	6		
	30A	UCB100H 2PT5S0000C 00030F	8	UCB100H 3PT5S0000C 00030F	8	UCB100H 4PT5S0000C 00030F	6		
	32A	UCB100H 2PT5S0000C 00032F	8	UCB100H 3PT5S0000C 00032F	8	UCB100H 4PT5S0000C 00032F	6		
	40A	UCB100H 2PT5S0000C 00040F	8	UCB100H 3PT5S0000C 00040F	8	UCB100H 4PT5S0000C 00040F	6		
	50A	UCB100H 2PT5S0000C 00050F	8	UCB100H 3PT5S0000C 00050F	8	UCB100H 4PT5S0000C 00050F	6		
	60A	UCB100H 2PT5S0000C 00060F	8	UCB100H 3PT5S0000C 00060F	8	UCB100H 4PT5S0000C 00060F	6		
	63A	UCB100H 2PT5S0000C 00063F	8	UCB100H 3PT5S0000C 00063F	8	UCB100H 4PT5S0000C 00063F	6		
	75A	UCB100H 2PT5S0000C 00075F	8	UCB100H 3PT5S0000C 00075F	8	UCB100H 4PT5S0000C 00075F	6		
	80A	UCB100H 2PT5S0000C 00080F	8	UCB100H 3PT5S0000C 00080F	8	UCB100H 4PT5S0000C 00080F	6		
	100A	UCB100H 2PT5S0000C 00100F	8	UCB100H 3PT5S0000C 00100F	8	UCB100H 4PT5S0000C 00100F	6		
	125A	UCB100H 2PT5S0000C 00125F	8	UCB100H 3PT5S0000C 00125F	8	UCB100H 4PT5S0000C 00125F	6		
UCB100L 50kA	15A	UCB100L 2PT5S0000C 00015F	8	UCB100L 3PT5S0000C 00015F	8	UCB100L 4PT5S0000C 00015F	6		
	16A	UCB100L 2PT5S0000C 00016F	8	UCB100L 3PT5S0000C 00016F	8	UCB100L 4PT5S0000C 00016F	6		
	20A	UCB100L 2PT5S0000C 00020F	8	UCB100L 3PT5S0000C 00020F	8	UCB100L 4PT5S0000C 00020F	6		
	25A	UCB100L 2PT5S0000C 00025F	8	UCB100L 3PT5S0000C 00025F	8	UCB100L 4PT5S0000C 00025F	6		
	30A	UCB100L 2PT5S0000C 00030F	8	UCB100L 3PT5S0000C 00030F	8	UCB100L 4PT5S0000C 00030F	6		
	32A	UCB100L 2PT5S0000C 00032F	8	UCB100L 3PT5S0000C 00032F	8	UCB100L 4PT5S0000C 00032F	6		
	40A	UCB100L 2PT5S0000C 00040F	8	UCB100L 3PT5S0000C 00040F	8	UCB100L 4PT5S0000C 00040F	6		
	50A	UCB100L 2PT5S0000C 00050F	8	UCB100L 3PT5S0000C 00050F	8	UCB100L 4PT5S0000C 00050F	6		
	60A	UCB100L 2PT5S0000C 00060F	8	UCB100L 3PT5S0000C 00060F	8	UCB100L 4PT5S0000C 00060F	6		
	63A	UCB100L 2PT5S0000C 00063F	8	UCB100L 3PT5S0000C 00063F	8	UCB100L 4PT5S0000C 00063F	6		
	75A	UCB100L 2PT5S0000C 00075F	8	UCB100L 3PT5S0000C 00075F	8	UCB100L 4PT5S0000C 00075F	6		
	80A	UCB100L 2PT5S0000C 00080F	8	UCB100L 3PT5S0000C 00080F	8	UCB100L 4PT5S0000C 00080F	6		
	100A	UCB100L 2PT5S0000C 00100F	8	UCB100L 3PT5S0000C 00100F	8	UCB100L 4PT5S0000C 00100F	6		
	125A	UCB100L 2PT5S0000C 00125F	8	UCB100L 3PT5S0000C 00125F	8	UCB100L 4PT5S0000C 00125F	6		

Specifications and Standard Order Codes

| UCB type / 160AF |

- UCB160H 42kA
- UCB160L 50kA

					UCB160H	UCB160L
						
Number of poles (P)					∗2, 3, 4	
Degree of protection (with terminal cover)					IP20	
Utilization category					A	
Suitability of isolation					○	
Protection					overload, inst., short-circuit	
Rating	Rated current (A)				100,125,160	
	Rated insulation voltage [Ui] (V)				AC690	
	Rated operational voltage [Ue] (V)				AC660	
					DC250	
	Rated impulse withstand voltage [Uimp] (kV)				6	
Rated short-circuit breaking capacity IEC 60947-2 K 60947-2	Ultimate [Icu] (kA r.m.s.)	AC600/660V, 50-60Hz			20	25
		AC480/500V, 50-60Hz			30	35
		AC440/460V, 50-60Hz			42	50
		AC380/415V, 50-60Hz			**42**	**50**
		AC220/240V, 50-60Hz			85	100
		DC250V			25	40
		DC125V			40	60
	Service [Ics]	% of [Icu]			50	
Trip mechanism & Protection characteristics	Thermal magnetic	Fixed thermal, Fixed instantaneous		INST	○	
					10×In	
		Adjustable thermal, Fixed instantaneous		LTD	(0.8-0.9-1)×In	
				INST	10×In	
Mounting	Direct mounting by screw				○	
	Plug-in	for Switchboard	Both line & load side		○ [1]	
			Line side only		○ [1]	
		for Distribution board			○ [1]	
Terminal connection		Screw			○	
		Bus bar			○	
Durability (times)	Mechanical operation				25,000	
	Electrical operation				10,000	
Dimensions (mm)	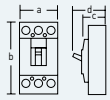	2/3/4P	a	Width	105[2]/105/140	
			b	Height	165	
			c	Depth	60	
			d		84.5	
Weight (kg, breaker only)		2/3/4P			1.1/1.3/1.6	

※ - The breaking capacity highlighted with blue and thick type is standard nominal value for each model in this catalogue.
1] Available for 3P breaker
2] ∗2P breaker has same dimension as 3P breaker, but the middle pole is removed.

▪ Accessories

- Signal

Auxiliary switch	1C, left-hand-side	2C, leftt-hand-side				
	AUX 12FG L1	AUX 12FG L2				
Trip alarm switch	1C, right-hand-side	1C, left-hand-side				
	ALT 12FG R1	ALT 12FG L1				
Shunt trip[1]	DC24V	DC100-110V	AC100-120V	AC200-230V	AC380-415V	AC440-480V
	SHT 12FG A	SHT 12FG C	SHT 12FG F	SHT 12FG H	SHT 12FG B	SHT 12FG D
Under voltage trip[2]	DC24V	DC100-110V	AC100-120V	AC200-230V	AC380-415V	AC440-480V
	UVT 12FG J	UVT 12FG L	UVT 12FG N	UVT 12FG P	UVT 12FG Q	UVT 12FG R

※ 1] The permissible operating voltage: 85-110% of rated voltage for AC , 75-125% for DC
2] The permissible operating voltage: 85-110% of rated voltage(AC), 85~125% of rated voltage(DC)
The tripping voltage: 20-70% of rated voltage(AC/DC)
Be sure not to use UVT for the electrical interlock system.

• Operating

Operating handle[1]	Power supply direction		Upper	Right	Left
	Surface	S type	TFG 20UGS U4	TFG 20UGS R4	TFG 20UGS L4
		L type	TFG 20UGL U4	–	TFG 20UGL L4
	Extended	S type	TFH 20UGS		
		L type	TFH 20UGL		
Motor operator[2]			DC24V	AC/DC110V	AC/DC220V
			MOT 20G DC24	MOT 20G ADC110	MOT 20G ADC220
Mechanical interlock			2 pole	3 pole	4 pole
			MIF 20UG 3	MIF 20UG 3	MIF 20UG 4
Padlock plate[3]			PLD 20UG		

※ 1] For detail type information, please refer to page 195-202. 2] Motor operator is not recommended for marine application. 3] Padlock is not supplied.

• Mounting

Plug-in[1]	Structure		For both line & load side	For line side only
	Mounting base		TDM 20CF[3]	TDM 20CF
	Connection block[2]	2C contact	CBM 20C 2	–
		5C contact	CBM 20C 5	–

※ 1] Available for 3P breaker
2] Connection blocks are required for internal accessory installation in both line & load side plug-in type 3P breaker.
3] 2EA are required for both line & load side plug-in type 3P breaker.

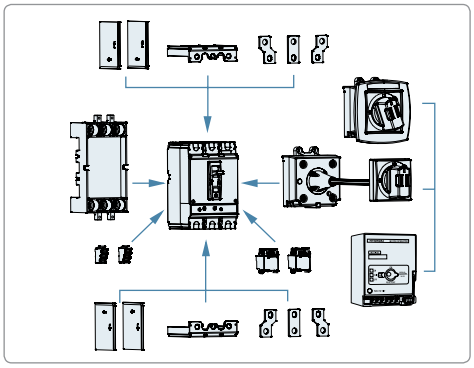

• Terminal

Terminal bus bar		2 pole (4EA/SET)	3 pole (6EA/SET)	4 pole (8EA/SET)
		TBB 20C 2	TBB 20C 3	TBB 20C 4
Cage terminal block		3EA/SET	4EA/SET	
		CTB 20C 3S	CTB 20C 4S	
Terminal cover[1]		2 pole	3 pole	4 pole
		TCF 20GP 3	TCF 20GP 3	TCF 20GP 4
Interpole barrier[2]	2EA/SET	TQQ 12FG 3PLINE		

※ 1] For both line and load side of breaker, 2EA shall be ordered.
2] Supplied as standard component
Required quantity for both line and load side of breaker: 2 pole 4EA, 3 pole 4EA, 4 pole 6EA

▪ Standard order code and unit

• Fixed thermal & fixed instantaneous / Thermal magnetic trip

40/45℃

Model / Breaking capacity at AC380/415V	Rated current	2 pole		3 pole		4 pole		Specification	Category
		Code	Unit (EA)	Code	Unit (EA)	Code	Unit (EA)		
UCB160H 42kA	100A	UCB160H 2PT4S0000C 00100	8	UCB160H 3PT4S0000C 00100	8	UCB160H 4PT4S0000C 00100	6	Screw type terminal connection, No option, 50/60Hz	MCCB /M2
	125A	UCB160H 2PT4S0000C 00125	8	UCB160H 3PT4S0000C 00125	8	UCB160H 4PT4S0000C 00125	6		
	160A	UCB160H 2PT4S0000C 00160	8	UCB160H 3PT4S0000C 00160	8	UCB160H 4PT4S0000C 00160	6		
UCB160L 50kA	100A	UCB160L 2PT4S0000C 00100	8	UCB160L 3PT4S0000C 00100	8	UCB160L 4PT4S0000C 00100	6		
	125A	UCB160L 2PT4S0000C 00125	8	UCB160L 3PT4S0000C 00125	8	UCB160L 4PT4S0000C 00125	6		
	160A	UCB160L 2PT4S0000C 00160	8	UCB160L 3PT4S0000C 00160	8	UCB160L 4PT4S0000C 00160	6		

50℃

Model / Breaking capacity at AC380/415V	Rated current	2 pole		3 pole		4 pole		Specification	Category
		Code	Unit (EA)	Code	Unit (EA)	Code	Unit (EA)		
UCB160H 42kA	100A	UCB160H 2PT5S0000C 00100	8	UCB160H 3PT5S0000C 00100	8	UCB160H 4PT5S0000C 00100	6	Screw type terminal connection, No option, 50/60Hz	MCCB /M2
	125A	UCB160H 2PT5S0000C 00125	8	UCB160H 3PT5S0000C 00125	8	UCB160H 4PT5S0000C 00125	6		
	160A	UCB160H 2PT5S0000C 00160	8	UCB160H 3PT5S0000C 00160	8	UCB160H 4PT5S0000C 00160	6		
UCB160L 50kA	100A	UCB160L 2PT5S0000C 00100	8	UCB160L 3PT5S0000C 00100	8	UCB160L 4PT5S0000C 00100	6		
	125A	UCB160L 2PT5S0000C 00125	8	UCB160L 3PT5S0000C 00125	8	UCB160L 4PT5S0000C 00125	6		
	160A	UCB160L 2PT5S0000C 00160	8	UCB160L 3PT5S0000C 00160	8	UCB160L 4PT5S0000C 00160	6		

• Adjustable thermal & fixed instantaneous / Thermal magnetic trip

40/45℃

Model / Breaking capacity at AC380/415V	Rated current	2 pole		3 pole		4 pole		Specification	Category
		Code	Unit (EA)	Code	Unit (EA)	Code	Unit (EA)		
UCB160H 42kA	100A	UCB160H 2PT4S0000C 00100F	8	UCB160H 3PT4S0000C 00100F	8	UCB160H 4PT4S0000C 00100F	6	Screw type terminal connection, No option, 50/60Hz	MCCB /M2
	125A	UCB160H 2PT4S0000C 00125F	8	UCB160H 3PT4S0000C 00125F	8	UCB160H 4PT4S0000C 00125F	6		
	160A	UCB160H 2PT4S0000C 00160F	8	UCB160H 3PT4S0000C 00160F	8	UCB160H 4PT4S0000C 00160F	6		
UCB160L 50kA	100A	UCB160L 2PT4S0000C 00100F	8	UCB160L 3PT4S0000C 00100F	8	UCB160L 4PT4S0000C 00100F	6		
	125A	UCB160L 2PT4S0000C 00125F	8	UCB160L 3PT4S0000C 00125F	8	UCB160L 4PT4S0000C 00125F	6		
	160A	UCB160L 2PT4S0000C 00160F	8	UCB160L 3PT4S0000C 00160F	8	UCB160L 4PT4S0000C 00160F	6		

50℃

Model / Breaking capacity at AC380/415V	Rated current	2 pole		3 pole		4 pole		Specification	Category
		Code	Unit (EA)	Code	Unit (EA)	Code	Unit (EA)		
UCB160H 42kA	100A	UCB160H 2PT5S0000C 00100F	8	UCB160H 3PT5S0000C 00100F	8	UCB160H 4PT5S0000C 00100F	6	Screw type terminal connection, No option, 50/60Hz	MCCB /M2
	125A	UCB160H 2PT5S0000C 00125F	8	UCB160H 3PT5S0000C 00125F	8	UCB160H 4PT5S0000C 00125F	6		
	160A	UCB160H 2PT5S0000C 00160F	8	UCB160H 3PT5S0000C 00160F	8	UCB160H 4PT5S0000C 00160F	6		
UCB160L 50kA	100A	UCB160L 2PT5S0000C 00100F	8	UCB160L 3PT5S0000C 00100F	8	UCB160L 4PT5S0000C 00100F	6		
	125A	UCB160L 2PT5S0000C 00125F	8	UCB160L 3PT5S0000C 00125F	8	UCB160L 4PT5S0000C 00125F	6		
	160A	UCB160L 2PT5S0000C 00160F	8	UCB160L 3PT5S0000C 00160F	8	UCB160L 4PT5S0000C 00160F	6		

Specifications and Standard Order Codes

| UCB type / 250AF |

- UCB250R 25/18kA
- UCB250S 35/25kA
- UCB250N 42/36kA

					UCB250R	UCB250S	UCB250N
							
Number of poles (P)					*2, 3, 4		
Degree of protection (with terminal cover)					IP20		
Utilization category					A		
Suitability of isolation					○		
Protection					overload, inst., short-circuit		
Rating	Rated current (A)				125, 150, 160, 175, 200, 225, 250		
	Rated insulation voltage [Ui] (V)				AC690		
	Rated operational voltage [Ue] (V)				AC660		
					DC250		
	Rated impulse withstand voltage [Uimp] (kV)				6		
Rated short-circuit breaking capacity IEC 60947-2 K 60947-2	Ultimate [Icu] (kA r.m.s.)	AC600/660V, 50-60Hz			7.5	10	18
		AC480/500V, 50-60Hz			10	14	25
		AC440/460V, 50-60Hz			18	25	35
		AC380/415V, 50-60Hz			25/18	35/25	42/36
		AC220/240V, 50-60Hz			35	50	65
		DC250V			10	14	18
		DC125V			15	20	25
	Service [Ics]	% of [Icu]			50		
Trip mechanism & Protection characteristics	Thermal magnetic	Fixed thermal, Fixed instantaneous			○		
				INST	10×In		
		Adjustable thermal, Fixed instantaneous		LTD	(0.8-0.9-1)×In		
				INST	10×In		
Mounting	Direct mounting by screw				○		
	Plug-in	for Switchboard	Both line & load side		○ [1]		
			Line side only		○ [1]		
		for Distribution board			○ [1]		
Terminal connection		Screw			○		
		Bus bar			○		
Durability (times)	Mechanical operation				25,000		
	Electrical operation				10,000		
Dimensions (mm) 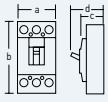		2/3/4P	a	Width	105[2]/105/140		
			b	Height	164		
			c	Depth	60		
			d		84		
Weight (kg, breaker only)		2/3/4P			1.1/1.2/1.5		

※ - The breaking capacity highlighted with blue and thick type is standard nominal value for each model in this catalogue.
1] Available for 3P breaker
2] 2P breaker has same dimension as 3P breaker, but the middle pole is removed.

▪ Accessories

• Signal

Auxiliary switch	1C, left-hand-side					
	AUX 20C L1					
Trip alarm switch	1C, left-hand-side					
	ALT 20C L1					
Shunt trip[1]	DC24V	DC100-110V	AC100-120V	AC200-230V	AC380-415V	AC440-480V
	SHT 20C A	-	SHT 20C F	SHT 20C H		
Under voltage trip[2]	DC24V	DC100-110V	AC100-120V	AC200-230V	AC380-415V	AC440-480V
	UVT 20C J	UVT 20C L	UVT 20C N	UVT 20C P	UVT 20C Q	UVT 20C R

※ 1] The permissible operating voltage: 85-110% of rated voltage for AC , 75-125% for DC
2] The permissible operating voltage: 85-110% of rated voltage(AC), 85-125% of rated voltage(DC)
The tripping voltage: 20-70% of rated voltage(AC/DC)
Be sure not to use UVT for the electrical interlock system.

• Operating

Operating handle[1]	**Power supply direction**		Upper	Right	Left
	Surface	**S type**	TFG 20CS U4	TFG 20CS R4	TFG 20CS L4
		L type	TFG 20CL U4	–	TFG 20CL L4
	Extended	**S type**	TFH 20CS		
		L type	TFH 20CL		
Motor operator[2]			DC24V	AC/DC110V	AC/DC220V
			MOT 20UC DC24	MOT 20UC ADC110	MOT 20UC ADC220
Mechanical interlock			2 pole	3 pole	4 pole
			MIF 20UG 3	MIF 20UG 3	MIF 20UG 4
Padlock plate[3]			PLD 20UG		

※ 1] For detail type information, please refer to page 195-202.
2] Motor operator is not recommended for marine application.
3] Padlock is not supplied.

• Mounting

Plug-in[1]	**Structure**		For both line & load side	For line side only
	Mounting base		TDM 20CF[3]	TDM 20CF
	Connection block[2]	**2C contact**	CBM 20C 2	–
		5C contact	CBM 20C 5	–

※ 1] Available for 3P breaker
2] Connection blocks are required for internal accessory installation in both line & load side plug-in type 3P breaker.
3] 2EA are required for both line & load side plug-in type 3P breaker.

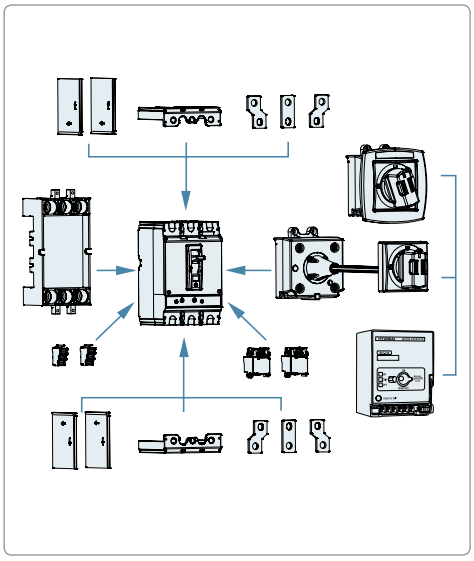

• Terminal

Terminal bus bar		2 pole (4EA/SET)	3 pole (6EA/SET)	4 pole (8EA/SET)
		TBB 20C 2	TBB 20C 3	TBB 20C 4
Cage terminal block		3EA/SET	4EA/SET	
		CTB 20C 3S	CTB 20C 4S	
Terminal cover[1]		2 pole	3 pole	4 pole
		TCF 20CP 3	TCF 20CP 3	TCF 20CP 4
Interpole barrier[2]	**2EA/SET**	TQQ 20C 3PLINE		

※ 1] For both line and load side of breaker, 2EA shall be ordered.
2] Supplied as standard component
Required quantity for both line and load side of breaker: 2 pole 4EA, 3 pole 4EA, 4 pole 6EA

Specifications and Standard Order Codes

▪ Standard order code and unit

• Fixed thermal & fixed instantaneous / Thermal magnetic trip

40/45℃

Model / Breaking capacity at AC380/415V	Rated current	2 pole		3 pole		4 pole		Specification	Category
		Code	Unit (EA)	Code	Unit (EA)	Code	Unit (EA)		
UCB250R 25/18kA	100A	UCB250R 2PT4S0000C 00100	10	UCB250R 3PT4S0000C 00100	10	UCB250R 4PT4S0000C 00100	8	Screw type terminal connection, No option, 50/60Hz	MCCB /M2
	125A	UCB250R 2PT4S0000C 00125	10	UCB250R 3PT4S0000C 00125	10	UCB250R 4PT4S0000C 00125	8		
	150A	UCB250R 2PT4S0000C 00150	10	UCB250R 3PT4S0000C 00150	10	UCB250R 4PT4S0000C 00150	8		
	160A	UCB250R 2PT4S0000C 00160	10	UCB250R 3PT4S0000C 00160	10	UCB250R 4PT4S0000C 00160	8		
	175A	UCB250R 2PT4S0000C 00175	10	UCB250R 3PT4S0000C 00175	10	UCB250R 4PT4S0000C 00175	8		
	200A	UCB250R 2PT4S0000C 00200	10	UCB250R 3PT4S0000C 00200	10	UCB250R 4PT4S0000C 00200	8		
	225A	UCB250R 2PT4S0000C 00225	10	UCB250R 3PT4S0000C 00225	10	UCB250R 4PT4S0000C 00225	8		
	250A	UCB250R 2PT4S0000C 00250	10	UCB250R 3PT4S0000C 00250	10	UCB250R 4PT4S0000C 00250	8		
UCB250S 35/25kA	100A	UCB250S 2PT4S0000C 00100	10	UCB250S 3PT4S0000C 00100	10	UCB250S 4PT4S0000C 00100	8		
	125A	UCB250S 2PT4S0000C 00125	10	UCB250S 3PT4S0000C 00125	10	UCB250S 4PT4S0000C 00125	8		
	150A	UCB250S 2PT4S0000C 00150	10	UCB250S 3PT4S0000C 00150	10	UCB250S 4PT4S0000C 00150	8		
	160A	UCB250S 2PT4S0000C 00160	10	UCB250S 3PT4S0000C 00160	10	UCB250S 4PT4S0000C 00160	8		
	175A	UCB250S 2PT4S0000C 00175	10	UCB250S 3PT4S0000C 00175	10	UCB250S 4PT4S0000C 00175	8		
	200A	UCB250S 2PT4S0000C 00200	10	UCB250S 3PT4S0000C 00200	10	UCB250S 4PT4S0000C 00200	8		
	225A	UCB250S 2PT4S0000C 00225	10	UCB250S 3PT4S0000C 00225	10	UCB250S 4PT4S0000C 00225	8		
	250A	UCB250S 2PT4S0000C 00250	10	UCB250S 3PT4S0000C 00250	10	UCB250S 4PT4S0000C 00250	8		
UCB250N 42/36kA	100A	UCB250N 2PT4S0000C 00100	10	UCB250N 3PT4S0000C 00100	10	UCB250N 4PT4S0000C 00100	8		
	125A	UCB250N 2PT4S0000C 00125	10	UCB250N 3PT4S0000C 00125	10	UCB250N 4PT4S0000C 00125	8		
	150A	UCB250N 2PT4S0000C 00150	10	UCB250N 3PT4S0000C 00150	10	UCB250N 4PT4S0000C 00150	8		
	160A	UCB250N 2PT4S0000C 00160	10	UCB250N 3PT4S0000C 00160	10	UCB250N 4PT4S0000C 00160	8		
	175A	UCB250N 2PT4S0000C 00175	10	UCB250N 3PT4S0000C 00175	10	UCB250N 4PT4S0000C 00175	8		
	200A	UCB250N 2PT4S0000C 00200	10	UCB250N 3PT4S0000C 00200	10	UCB250N 4PT4S0000C 00200	8		
	225A	UCB250N 2PT4S0000C 00225	10	UCB250N 3PT4S0000C 00225	10	UCB250N 4PT4S0000C 00225	8		
	250A	UCB250N 2PT4S0000C 00250	10	UCB250N 3PT4S0000C 00250	10	UCB250N 4PT4S0000C 00250	8		

50℃

Model / Breaking capacity at AC380/415V	Rated current	2 pole		3 pole		4 pole		Specification	Category
		Code	Unit (EA)	Code	Unit (EA)	Code	Unit (EA)		
UCB250R 25/18kA	100A	UCB250R 2PT5S0000C 00100	10	UCB250R 3PT5S0000C 00100	10	UCB250R 4PT5S0000C 00100	8	Screw type terminal connection, No option, 50/60Hz	MCCB /M2
	125A	UCB250R 2PT5S0000C 00125	10	UCB250R 3PT5S0000C 00125	10	UCB250R 4PT5S0000C 00125	8		
	150A	UCB250R 2PT5S0000C 00150	10	UCB250R 3PT5S0000C 00150	10	UCB250R 4PT5S0000C 00150	8		
	160A	UCB250R 2PT5S0000C 00160	10	UCB250R 3PT5S0000C 00160	10	UCB250R 4PT5S0000C 00160	8		
	175A	UCB250R 2PT5S0000C 00175	10	UCB250R 3PT5S0000C 00175	10	UCB250R 4PT5S0000C 00175	8		
	200A	UCB250R 2PT5S0000C 00200	10	UCB250R 3PT5S0000C 00200	10	UCB250R 4PT5S0000C 00200	8		
	225A	UCB250R 2PT5S0000C 00225	10	UCB250R 3PT5S0000C 00225	10	UCB250R 4PT5S0000C 00225	8		
	250A	UCB250R 2PT5S0000C 00250	10	UCB250R 3PT5S0000C 00250	10	UCB250R 4PT5S0000C 00250	8		
UCB250S 35/25kA	100A	UCB250S 2PT5S0000C 00100	10	UCB250S 3PT5S0000C 00100	10	UCB250S 4PT5S0000C 00100	8		
	125A	UCB250S 2PT5S0000C 00125	10	UCB250S 3PT5S0000C 00125	10	UCB250S 4PT5S0000C 00125	8		
	150A	UCB250S 2PT5S0000C 00150	10	UCB250S 3PT5S0000C 00150	10	UCB250S 4PT5S0000C 00150	8		
	160A	UCB250S 2PT5S0000C 00160	10	UCB250S 3PT5S0000C 00160	10	UCB250S 4PT5S0000C 00160	8		
	175A	UCB250S 2PT5S0000C 00175	10	UCB250S 3PT5S0000C 00175	10	UCB250S 4PT5S0000C 00175	8		
	200A	UCB250S 2PT5S0000C 00200	10	UCB250S 3PT5S0000C 00200	10	UCB250S 4PT5S0000C 00200	8		
	225A	UCB250S 2PT5S0000C 00225	10	UCB250S 3PT5S0000C 00225	10	UCB250S 4PT5S0000C 00225	8		
	250A	UCB250S 2PT5S0000C 00250	10	UCB250S 3PT5S0000C 00250	10	UCB250S 4PT5S0000C 00250	8		
UCB250N 42/36kA	100A	UCB250N 2PT5S0000C 00100	10	UCB250N 3PT5S0000C 00100	10	UCB250N 4PT5S0000C 00100	8		
	125A	UCB250N 2PT5S0000C 00125	10	UCB250N 3PT5S0000C 00125	10	UCB250N 4PT5S0000C 00125	8		
	150A	UCB250N 2PT5S0000C 00150	10	UCB250N 3PT5S0000C 00150	10	UCB250N 4PT5S0000C 00150	8		
	160A	UCB250N 2PT5S0000C 00160	10	UCB250N 3PT5S0000C 00160	10	UCB250N 4PT5S0000C 00160	8		
	175A	UCB250N 2PT5S0000C 00175	10	UCB250N 3PT5S0000C 00175	10	UCB250N 4PT5S0000C 00175	8		
	200A	UCB250N 2PT5S0000C 00200	10	UCB250N 3PT5S0000C 00200	10	UCB250N 4PT5S0000C 00200	8		
	225A	UCB250N 2PT5S0000C 00225	10	UCB250N 3PT5S0000C 00225	10	UCB250N 4PT5S0000C 00225	8		
	250A	UCB250N 2PT5S0000C 00250	10	UCB250N 3PT5S0000C 00250	10	UCB250N 4PT5S0000C 00250	8		

• Adjustable thermal & fixed instantaneous / Thermal magnetic trip

40/45℃

Model / Breaking capacity at AC380/415V	Rated current	2 pole		3 pole		4 pole		Specification	Category
		Code	Unit (EA)	Code	Unit (EA)	Code	Unit (EA)		
UCB250R 25/18kA	125A	UCB250R 2PT4S0000C 00125F	10	UCB250R 3PT4S0000C 00125F	10	UCB250R 4PT4S0000C 00125F	8	Screw type terminal connection, No option, 50/60Hz	MCCB /M2
	150A	UCB250R 2PT4S0000C 00150F	10	UCB250R 3PT4S0000C 00150F	10	UCB250R 4PT4S0000C 00150F	8		
	160A	UCB250R 2PT4S0000C 00160F	10	UCB250R 3PT4S0000C 00160F	10	UCB250R 4PT4S0000C 00160F	8		
	175A	UCB250R 2PT4S0000C 00175F	10	UCB250R 3PT4S0000C 00175F	10	UCB250R 4PT4S0000C 00175F	8		
	200A	UCB250R 2PT4S0000C 00200F	10	UCB250R 3PT4S0000C 00200F	10	UCB250R 4PT4S0000C 00200F	8		
	225A	UCB250R 2PT4S0000C 00225F	10	UCB250R 3PT4S0000C 00225F	10	UCB250R 4PT4S0000C 00225F	8		
	250A	UCB250R 2PT4S0000C 00250F	10	UCB250R 3PT4S0000C 00250F	10	UCB250R 4PT4S0000C 00250F	8		
UCB250S 35/25kA	125A	UCB250S 2PT4S0000C 00125F	10	UCB250S 3PT4S0000C 00125F	10	UCB250S 4PT4S0000C 00125F	8		
	150A	UCB250S 2PT4S0000C 00150F	10	UCB250S 3PT4S0000C 00150F	10	UCB250S 4PT4S0000C 00150F	8		
	160A	UCB250S 2PT4S0000C 00160F	10	UCB250S 3PT4S0000C 00160F	10	UCB250S 4PT4S0000C 00160F	8		
	175A	UCB250S 2PT4S0000C 00175F	10	UCB250S 3PT4S0000C 00175F	10	UCB250S 4PT4S0000C 00175F	8		
	200A	UCB250S 2PT4S0000C 00200F	10	UCB250S 3PT4S0000C 00200F	10	UCB250S 4PT4S0000C 00200F	8		
	225A	UCB250S 2PT4S0000C 00225F	10	UCB250S 3PT4S0000C 00225F	10	UCB250S 4PT4S0000C 00225F	8		
	250A	UCB250S 2PT4S0000C 00250F	10	UCB250S 3PT4S0000C 00250F	10	UCB250S 4PT4S0000C 00250F	8		
UCB250N 42/36kA	125A	UCB250N 2PT4S0000C 00125F	10	UCB250N 3PT4S0000C 00125F	10	UCB250N 4PT4S0000C 00125F	8		
	150A	UCB250N 2PT4S0000C 00150F	10	UCB250N 3PT4S0000C 00150F	10	UCB250N 4PT4S0000C 00150F	8		
	160A	UCB250N 2PT4S0000C 00160F	10	UCB250N 3PT4S0000C 00160F	10	UCB250N 4PT4S0000C 00160F	8		
	175A	UCB250N 2PT4S0000C 00175F	10	UCB250N 3PT4S0000C 00175F	10	UCB250N 4PT4S0000C 00175F	8		
	200A	UCB250N 2PT4S0000C 00200F	10	UCB250N 3PT4S0000C 00200F	10	UCB250N 4PT4S0000C 00200F	8		
	225A	UCB250N 2PT4S0000C 00225F	10	UCB250N 3PT4S0000C 00225F	10	UCB250N 4PT4S0000C 00225F	8		
	250A	UCB250N 2PT4S0000C 00250F	10	UCB250N 3PT4S0000C 00250F	10	UCB250N 4PT4S0000C 00250F	8		

50℃

Model / Breaking capacity at AC380/415V	Rated current	2 pole		3 pole		4 pole		Specification	Category
		Code	Unit (EA)	Code	Unit (EA)	Code	Unit (EA)		
UCB250R 25/18kA	125A	UCB250R 2PT5S0000C 00125F	10	UCB250R 3PT5S0000C 00125F	10	UCB250R 4PT5S0000C 00125F	8	Screw type terminal connection, No option, 50/60Hz	MCCB /M2
	150A	UCB250R 2PT5S0000C 00150F	10	UCB250R 3PT5S0000C 00150F	10	UCB250R 4PT5S0000C 00150F	8		
	160A	UCB250R 2PT5S0000C 00160F	10	UCB250R 3PT5S0000C 00160F	10	UCB250R 4PT5S0000C 00160F	8		
	175A	UCB250R 2PT5S0000C 00175F	10	UCB250R 3PT5S0000C 00175F	10	UCB250R 4PT5S0000C 00175F	8		
	200A	UCB250R 2PT5S0000C 00200F	10	UCB250R 3PT5S0000C 00200F	10	UCB250R 4PT5S0000C 00200F	8		
	225A	UCB250R 2PT5S0000C 00225F	10	UCB250R 3PT5S0000C 00225F	10	UCB250R 4PT5S0000C 00225F	8		
	250A	UCB250R 2PT5S0000C 00250F	10	UCB250R 3PT5S0000C 00250F	10	UCB250R 4PT5S0000C 00250F	8		
UCB250S 35/25kA	125A	UCB250S 2PT5S0000C 00125F	10	UCB250S 3PT5S0000C 00125F	10	UCB250S 4PT5S0000C 00125F	8		
	150A	UCB250S 2PT5S0000C 00150F	10	UCB250S 3PT5S0000C 00150F	10	UCB250S 4PT5S0000C 00150F	8		
	160A	UCB250S 2PT5S0000C 00160F	10	UCB250S 3PT5S0000C 00160F	10	UCB250S 4PT5S0000C 00160F	8		
	175A	UCB250S 2PT5S0000C 00175F	10	UCB250S 3PT5S0000C 00175F	10	UCB250S 4PT5S0000C 00175F	8		
	200A	UCB250S 2PT5S0000C 00200F	10	UCB250S 3PT5S0000C 00200F	10	UCB250S 4PT5S0000C 00200F	8		
	225A	UCB250S 2PT5S0000C 00225F	10	UCB250S 3PT5S0000C 00225F	10	UCB250S 4PT5S0000C 00225F	8		
	250A	UCB250S 2PT5S0000C 00250F	10	UCB250S 3PT5S0000C 00250F	10	UCB250S 4PT5S0000C 00250F	8		
UCB250N 42/36kA	125A	UCB250N 2PT5S0000C 00125F	10	UCB250N 3PT5S0000C 00125F	10	UCB250N 4PT5S0000C 00125F	8		
	150A	UCB250N 2PT5S0000C 00150F	10	UCB250N 3PT5S0000C 00150F	10	UCB250N 4PT5S0000C 00150F	8		
	160A	UCB250N 2PT5S0000C 00160F	10	UCB250N 3PT5S0000C 00160F	10	UCB250N 4PT5S0000C 00160F	8		
	175A	UCB250N 2PT5S0000C 00175F	10	UCB250N 3PT5S0000C 00175F	10	UCB250N 4PT5S0000C 00175F	8		
	200A	UCB250N 2PT5S0000C 00200F	10	UCB250N 3PT5S0000C 00200F	10	UCB250N 4PT5S0000C 00200F	8		
	225A	UCB250N 2PT5S0000C 00225F	10	UCB250N 3PT5S0000C 00225F	10	UCB250N 4PT5S0000C 00225F	8		
	250A	UCB250N 2PT5S0000C 00250F	10	UCB250N 3PT5S0000C 00250F	10	UCB250N 4PT5S0000C 00250F	8		

Specifications and Standard Order Codes

| UCB type / 250AF |

- UCB250H 42kA
- UCB250L 50kA

					UCB250H	UCB250L
						
Number of poles (P)					∗2, 3, 4	
Degree of protection (with terminal cover)					IP20	
Utilization category					A	
Suitability of isolation					○	
Protection					overload, inst., short-circuit	
Rating	Rated current (A)				125,150,160,175,200,225,250	
	Rated insulation voltage [Ui] (V)				AC690	
	Rated operational voltage [Ue] (V)				AC660	
					DC250	
	Rated impulse withstand voltage [Uimp] (kV)				6	
Rated short-circuit breaking capacity IEC 60947-2 K 60947-2	Ultimate [Icu] (kA r.m.s.)	AC600/660V, 50-60Hz			20	25
		AC480/500V, 50-60Hz			30	35
		AC440/460V, 50-60Hz			42	50
		AC380/415V, 50-60Hz			42	50
		AC220/240V, 50-60Hz			85	100
		DC250V			25	40
		DC125V			40	60
	Service [Ics]	% of [Icu]			50	
Trip mechanism & Protection characteristics	Thermal magnetic	Fixed thermal, Fixed instantaneous			○	
				INST	10×In	
		Adjustable thermal, Fixed instantaneous		LTD	(0.8-0.9-1)×In	
				INST	10×In	
Mounting	Direct mounting by screw				○	
	Plug-in	for Switchboard	Both line & load side		○ [1]	
			Line side only		○ [1]	
		for Distribution board			○ [1]	
Terminal connection		Screw			○	
		Bus bar			○	
Durability (times)	Mechanical operation				25,000	
	Electrical operation				10,000	
Dimensions (mm) 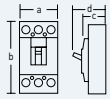		2/3/4P	a	Width	105[2]/105/140	
			b	Height	165	
			c	Depth	60	
			d		84.5	
Weight (kg, breaker only)		2/3/4P			1.1/1.3/1.6	

※ - The breaking capacity highlighted with blue and thick type is standard nominal value for each model in this catalogue.
1] Available for 3P breaker
2] ∗2P breaker has same dimension as 3P breaker, but the middle pole is removed.

▪ Accessories

• Signal

Auxiliary switch	1C, left-hand-side	2C, left-hand-side				
	AUX 12FG L1	AUX 12FG L2				
Trip alarm switch	1C, right-hand-side	1C, left-hand-side				
	ALT 12FG R1	ALT 12FG L1				
Shunt trip[1]	DC24V	DC100-110V	AC100-120V	AC200-230V	AC380-415V	AC440-480V
	SHT 12FG A	SHT 12FG C	SHT 12FG F	SHT 12FG H	SHT 12FG B	SHT 12FG D
Under voltage trip[2]	DC24V	DC100-110V	AC100-120V	AC200-230V	AC380-415V	AC440-480V
	UVT 12FG J	UVT 12FG L	UVT 12FG N	UVT 12FG P	UVT 12FG Q	UVT 12FG R

※ 1] The permissible operating voltage: 85-110% of rated voltage for AC , 75-125% for DC
2] The permissible operating voltage: 85-110% of rated voltage(AC), 85-125% of rated voltage(DC)
The tripping voltage: 20-70% of rated voltage(AC/DC)
Be sure not to use UVT for the electrical interlock system.

• Operating

Operating handle[1]	**Power supply direction**		Upper	Right	Left
	Surface	**S type**	TFG 20UGS U4	TFG 20UGS R4	TFG 20UGS L4
		L type	TFG 20UGL U4	–	TFG 20UGL L4
	Extended	**S type**	TFH 20UGS		
		L type	TFH 20UGL		
Motor operator[2]			DC24V	AC/DC110V	AC/DC220V
			MOT 20G DC24	MOT 20G ADC110	MOT 20G ADC220
Mechanical interlock			2 pole	3 pole	4 pole
			MIF 20UG 3	MIF 20UG 3	MIF 20UG 4
Padlock plate[3]			PLD 20UG		

※ 1] For detail type information, please refer to page 195-202.
2] Motor operator is not recommended for marine application.
3] Padlock is not supplied.

• Mounting

Plug-in[1]	**Structure**		For both line & load side	For line side only
	Mounting base		TDM 20CF[3]	TDM 20CF
	Connection block[2]	**2C contact**	CBM 20C 2	–
		5C contact	CBM 20C 5	–

※ 1] Available for 3P breaker
2] Connection blocks are required for internal accessory installation in both line & load side plug-in type 3P breaker.
3] 2EA are required for both line & load side plug-in type 3P breaker.

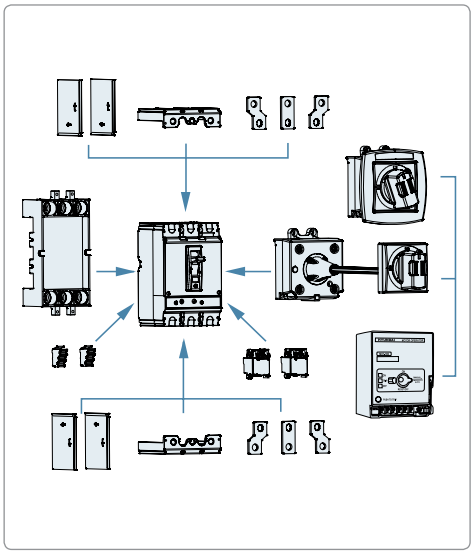

• Terminal

Terminal bus bar		2 pole (4EA/SET)	3 pole (6EA/SET)	4 pole (8EA/SET)
		TBB 20C 2	TBB 20C 3	TBB 20C 4
Cage terminal block		3EA/SET	4EA/SET	
		CTB 20C 3S	CTB 20C 4S	
Terminal cover[1]		2 pole	3 pole	4 pole
		TCF 20GP 3	TCF 20GP 3	TCF 20GP 4
Interpole barrier[2]	**2EA/SET**	TQQ 12FG 3PLINE		

※ 1] For both line and load side of breaker, 2EA shall be ordered.
2] Supplied as standard component
Required quantity for both line and load side of breaker: 2 pole 4EA, 3 pole 4EA, 4 pole 6EA

Specifications and Standard Order Codes

▪ Standard order code and unit

• Fixed thermal & fixed instantaneous / Thermal magnetic trip

40/45℃

Model / Breaking capacity at AC380/415V	Rated current	2 pole		3 pole		4 pole		Specification	Category
		Code	Unit (EA)	Code	Unit (EA)	Code	Unit (EA)		
UCB250H 42kA	125A	UCB250H 2PT4S0000C 00125	8	UCB250H 3PT4S0000C 00125	8	UCB250H 4PT4S0000C 00125	6	Screw type terminal connection, No option, 50/60Hz	MCCB /M2
	150A	UCB250H 2PT4S0000C 00150	8	UCB250H 3PT4S0000C 00150	8	UCB250H 4PT4S0000C 00150	6		
	160A	UCB250H 2PT4S0000C 00160	8	UCB250H 3PT4S0000C 00160	8	UCB250H 4PT4S0000C 00160	6		
	175A	UCB250H 2PT4S0000C 00175	8	UCB250H 3PT4S0000C 00175	8	UCB250H 4PT4S0000C 00175	6		
	200A	UCB250H 2PT4S0000C 00200	8	UCB250H 3PT4S0000C 00200	8	UCB250H 4PT4S0000C 00200	6		
	225A	UCB250H 2PT4S0000C 00225	8	UCB250H 3PT4S0000C 00225	8	UCB250H 4PT4S0000C 00225	6		
	250A	UCB250H 2PT4S0000C 00250	8	UCB250H 3PT4S0000C 00250	8	UCB250H 4PT4S0000C 00250	6		
UCB250L 50kA	125A	UCB250L 2PT4S0000C 00125	8	UCB250L 3PT4S0000C 00125	8	UCB250L 4PT4S0000C 00125	6		
	150A	UCB250L 2PT4S0000C 00150	8	UCB250L 3PT4S0000C 00150	8	UCB250L 4PT4S0000C 00150	6		
	160A	UCB250L 2PT4S0000C 00160	8	UCB250L 3PT4S0000C 00160	8	UCB250L 4PT4S0000C 00160	6		
	175A	UCB250L 2PT4S0000C 00175	8	UCB250L 3PT4S0000C 00175	8	UCB250L 4PT4S0000C 00175	6		
	200A	UCB250L 2PT4S0000C 00200	8	UCB250L 3PT4S0000C 00200	8	UCB250L 4PT4S0000C 00200	6		
	225A	UCB250L 2PT4S0000C 00225	8	UCB250L 3PT4S0000C 00225	8	UCB250L 4PT4S0000C 00225	6		
	250A	UCB250L 2PT4S0000C 00250	8	UCB250L 3PT4S0000C 00250	8	UCB250L 4PT4S0000C 00250	6		

50℃

Model / Breaking capacity at AC380/415V	Rated current	2 pole		3 pole		4 pole		Specification	Category
		Code	Unit (EA)	Code	Unit (EA)	Code	Unit (EA)		
UCB250H 42kA	125A	UCB250H 2PT5S0000C 00125	8	UCB250H 3PT5S0000C 00125	8	UCB250H 4PT5S0000C 00125	6	Screw type terminal connection, No option, 50/60Hz	MCCB /M2
	150A	UCB250H 2PT5S0000C 00150	8	UCB250H 3PT5S0000C 00150	8	UCB250H 4PT5S0000C 00150	6		
	160A	UCB250H 2PT5S0000C 00160	8	UCB250H 3PT5S0000C 00160	8	UCB250H 4PT5S0000C 00160	6		
	175A	UCB250H 2PT5S0000C 00175	8	UCB250H 3PT5S0000C 00175	8	UCB250H 4PT5S0000C 00175	6		
	200A	UCB250H 2PT5S0000C 00200	8	UCB250H 3PT5S0000C 00200	8	UCB250H 4PT5S0000C 00200	6		
	225A	UCB250H 2PT5S0000C 00225	8	UCB250H 3PT5S0000C 00225	8	UCB250H 4PT5S0000C 00225	6		
	250A	UCB250H 2PT5S0000C 00250	8	UCB250H 3PT5S0000C 00250	8	UCB250H 4PT5S0000C 00250	6		
UCB250L 50kA	125A	UCB250L 2PT5S0000C 00125	8	UCB250L 3PT5S0000C 00125	8	UCB250L 4PT5S0000C 00125	6		
	150A	UCB250L 2PT5S0000C 00150	8	UCB250L 3PT5S0000C 00150	8	UCB250L 4PT5S0000C 00150	6		
	160A	UCB250L 2PT5S0000C 00160	8	UCB250L 3PT5S0000C 00160	8	UCB250L 4PT5S0000C 00160	6		
	175A	UCB250L 2PT5S0000C 00175	8	UCB250L 3PT5S0000C 00175	8	UCB250L 4PT5S0000C 00175	6		
	200A	UCB250L 2PT5S0000C 00200	8	UCB250L 3PT5S0000C 00200	8	UCB250L 4PT5S0000C 00200	6		
	225A	UCB250L 2PT5S0000C 00225	8	UCB250L 3PT5S0000C 00225	8	UCB250L 4PT5S0000C 00225	6		
	250A	UCB250L 2PT5S0000C 00250	8	UCB250L 3PT5S0000C 00250	8	UCB250L 4PT5S0000C 00250	6		

• Adjustable thermal & fixed instantaneous / Thermal magnetic trip

40/45℃

Model / Breaking capacity at AC380/415V	Rated current	2 pole		3 pole		4 pole		Specification	Category
		Code	Unit (EA)	Code	Unit (EA)	Code	Unit (EA)		
UCB250H 42kA	125A	UCB250H 2PT4S0000C 00125F	8	UCB250H 3PT4S0000C 00125F	8	UCB250H 4PT4S0000C 00125F	6	Screw type terminal connection, No option, 50/60Hz	MCCB /M2
	150A	UCB250H 2PT4S0000C 00150F	8	UCB250H 3PT4S0000C 00150F	8	UCB250H 4PT4S0000C 00150F	6		
	160A	UCB250H 2PT4S0000C 00160F	8	UCB250H 3PT4S0000C 00160F	8	UCB250H 4PT4S0000C 00160F	6		
	175A	UCB250H 2PT4S0000C 00175F	8	UCB250H 3PT4S0000C 00175F	8	UCB250H 4PT4S0000C 00175F	6		
	200A	UCB250H 2PT4S0000C 00200F	8	UCB250H 3PT4S0000C 00200F	8	UCB250H 4PT4S0000C 00200F	6		
	225A	UCB250H 2PT4S0000C 00225F	8	UCB250H 3PT4S0000C 00225F	8	UCB250H 4PT4S0000C 00225F	6		
	250A	UCB250H 2PT4S0000C 00250F	8	UCB250H 3PT4S0000C 00250F	8	UCB250H 4PT4S0000C 00250F	6		
UCB250L 50kA	125A	UCB250L 2PT4S0000C 00125F	8	UCB250L 3PT4S0000C 00125F	8	UCB250L 4PT4S0000C 00125F	6		
	150A	UCB250L 2PT4S0000C 00150F	8	UCB250L 3PT4S0000C 00150F	8	UCB250L 4PT4S0000C 00150F	6		
	160A	UCB250L 2PT4S0000C 00160F	8	UCB250L 3PT4S0000C 00160F	8	UCB250L 4PT4S0000C 00160F	6		
	175A	UCB250L 2PT4S0000C 00175F	8	UCB250L 3PT4S0000C 00175F	8	UCB250L 4PT4S0000C 00175F	6		
	200A	UCB250L 2PT4S0000C 00200F	8	UCB250L 3PT4S0000C 00200F	8	UCB250L 4PT4S0000C 00200F	6		
	225A	UCB250L 2PT4S0000C 00225F	8	UCB250L 3PT4S0000C 00225F	8	UCB250L 4PT4S0000C 00225F	6		
	250A	UCB250L 2PT4S0000C 00250F	8	UCB250L 3PT4S0000C 00250F	8	UCB250L 4PT4S0000C 00250F	6		

50℃

Model / Breaking capacity at AC380/415V	Rated current	2 pole		3 pole		4 pole		Specification	Category
		Code	Unit (EA)	Code	Unit (EA)	Code	Unit (EA)		
UCB250H 42kA	125A	UCB250H 2PT5S0000C 00125F	8	UCB250H 3PT5S0000C 00125F	8	UCB250H 4PT5S0000C 00125F	6	Screw type terminal connection, No option, 50/60Hz	MCCB /M2
	150A	UCB250H 2PT5S0000C 00150F	8	UCB250H 3PT5S0000C 00150F	8	UCB250H 4PT5S0000C 00150F	6		
	160A	UCB250H 2PT5S0000C 00160F	8	UCB250H 3PT5S0000C 00160F	8	UCB250H 4PT5S0000C 00160F	6		
	175A	UCB250H 2PT5S0000C 00175F	8	UCB250H 3PT5S0000C 00175F	8	UCB250H 4PT5S0000C 00175F	6		
	200A	UCB250H 2PT5S0000C 00200F	8	UCB250H 3PT5S0000C 00200F	8	UCB250H 4PT5S0000C 00200F	6		
	225A	UCB250H 2PT5S0000C 00225F	8	UCB250H 3PT5S0000C 00225F	8	UCB250H 4PT5S0000C 00225F	6		
	250A	UCB250H 2PT5S0000C 00250F	8	UCB250H 3PT5S0000C 00250F	8	UCB250H 4PT5S0000C 00250F	6		
UCB250L 50kA	125A	UCB250L 2PT5S0000C 00125F	8	UCB250L 3PT5S0000C 00125F	8	UCB250L 4PT5S0000C 00125F	6		
	150A	UCB250L 2PT5S0000C 00150F	8	UCB250L 3PT5S0000C 00150F	8	UCB250L 4PT5S0000C 00150F	6		
	160A	UCB250L 2PT5S0000C 00160F	8	UCB250L 3PT5S0000C 00160F	8	UCB250L 4PT5S0000C 00160F	6		
	175A	UCB250L 2PT5S0000C 00175F	8	UCB250L 3PT5S0000C 00175F	8	UCB250L 4PT5S0000C 00175F	6		
	200A	UCB250L 2PT5S0000C 00200F	8	UCB250L 3PT5S0000C 00200F	8	UCB250L 4PT5S0000C 00200F	6		
	225A	UCB250L 2PT5S0000C 00225F	8	UCB250L 3PT5S0000C 00225F	8	UCB250L 4PT5S0000C 00225F	6		
	250A	UCB250L 2PT5S0000C 00250F	8	UCB250L 3PT5S0000C 00250F	8	UCB250L 4PT5S0000C 00250F	6		

Specifications and Standard Order Codes

| UCB type / 400AF |

- UCB400R 30kA
- UCB400S 42kA
- UCB400H 65kA
- UCB400L 100kA



				UCB400R	UCB400S	UCB400H	UCB400L
Number of poles (P)				∗2, 3, 4			
Degree of protection (without terminal bus bar)				IP20			
Utilization category				A			
Suitability of isolation				○			
Protection				overload, inst., short-circuit			
Rating	Rated current (A)			250, 300, 320, 350, 400			
	Rated insulation voltage [Ui] (V)			AC690			
	Rated operational voltage [Ue] (V)			AC660			
				DC250			
	Rated impulse withstand voltage [Uimp] (kV)			6			
Rated short-circuit breaking capacity IEC 60947-2 K 60947-2	Ultimate [Icu] (kA r.m.s.)	AC600/660V, 50-60Hz		18	22	25	30
		AC480/500V, 50-60Hz		18	25	35	65
		AC440/460V, 50-60Hz		25	35	50	85
		AC380/415V, 50-60Hz		**30**	**42**	**65**	**100**
		AC220/240V, 50-60Hz		35	50	85	125
		DC250V		14	25	40	40
		DC125V		20	30	50	60
	Service [Ics]	% of [Icu]		50			
Trip mechanism & Protection characteristics	Thermal magnetic	Fixed thermal, Fixed instantaneous		○			
			INST	10×In			
		Adjustable thermal, Fixed instantaneous	LTD	(0.8–0.9–1)×In			
			INST	10×In			
Mounting	Direct mounting by screw			○			
	Plug-in	for Switchboard	Both line & load side	○ [1]			
			Line side only	○ [1]			
Terminal connection		Screw		○			
		Bus bar		○			
Durability (times)	Mechanical operation			20,000			
	Electrical operation			6,000			
Dimensions (mm) 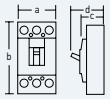		2/3/4P	a Width	140[2]/140/185			
			b Height	257			
			c Depth	110			
			d	145			
Weight (kg, breaker only)		2/3/4P		4/4.5/5.4			

※ - The breaking capacity highlighted with blue and thick type is standard nominal value for each model in this catalogue.
1) Available for 3P breaker
2) ∗2P breaker has same dimension as 3P breaker, but the middle pole is removed.

▪ Accessories

• Signal

Auxiliary switch	1C, right-hand-side					
	AUX 46D R1					
Trip alarm switch	1C, left-hand-side					
	ALT 46D L1					
Shunt trip[1]	DC24V	DC100-110V	AC100-120V	AC200-230V	AC380-415V	AC440-480V
	SHT 46D A	SHT 46D C	SHT 46D F	SHT 46D H	SHT 46D B	SHT 46D D
Under voltage trip[2]	DC24V	DC100-110V	AC100-120V	AC200-230V	AC380-415V	AC440-480V
	*UVT 46D J	*UVT 46D L	*UVT 46D N	*UVT 46D P	*UVT 46D Q	*UVT 46D R

※ 1] The permissible operating voltage: 85-110% of rated voltage for AC , 75-125% for DC
2] The permissible operating voltage: 85-110% of rated voltage(AC), 85-125% of rated voltage(DC)
The tripping voltage: 20-70% of rated voltage(AC/DC)
Be sure not to use UVT for the electrical interlock system.
*Reset is possible without power.

• Operating

Operating handle[1]	**Power supply direction**		Upper	Right	Left
	Surface	**S type**	TFG 46DS U4	TFG 46DS R4	TFG 46DS L4
	Extended	**S type**	TFH 46DS		
Motor operator[2]			DC24V	AC/DC110V	AC/DC220V
			MOT 40D DC24	MOT 40D ADC110	MOT 40D ADC220
Mechanical interlock			2 pole	3 pole	4 pole
			MIF 40D 3	MIF 40D 3	MIF 40D 4
Padlock plate[3]			PLD 40D		
Extension handle[4]			THA 46D		

※ 1] For detail type information, please refer to page no. 195-202.
2] Motor operator is not recommended for marine application.
3] Padlock is not supplied. 4] Supplied as standard component

• Mounting

Plug-in[1]	**Structure**		For both line & load side	For line side only
	Mounting base		TDM 4BA[3]	TDM 4BA
	Connection block[2]	**2C contact**	TYA 5/2[4]	–
		5C contact	TYA 5/5[4]	–

※ 1] Available for 3P breaker
2] Connection blocks are required for internal accessory installation in both line & load side plug-in type 3P breaker.
3] 2EA are required for both line & load side plug-in type 3P breaker.
4] TYA type connection blocks are to be installed with separate mounting angle. Separate mounting angle is not supplied.

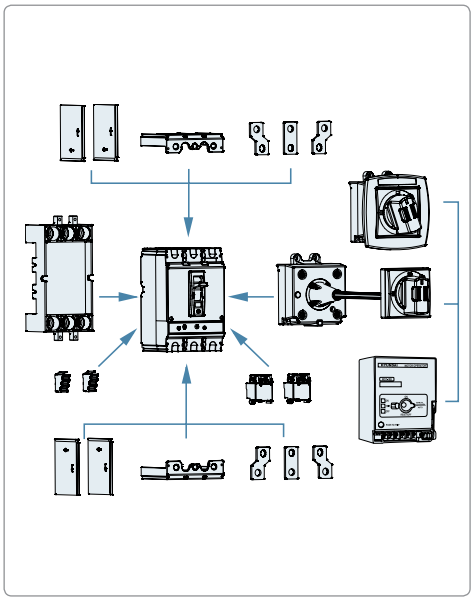

• Terminal

Terminal bus bar	2 pole (4EA/SET)	3 pole (6EA/SET)	4 pole (8EA/SET)	
	TBB 4S 2	TBB 4S 3	TBB 4S 4	
Cage terminal block	3EA/SET	4EA/SET		
	CTB 40D 3S	CTB 40D 4S		
Terminal cover[1]	2 pole	3 pole	4 pole	
	TCF 40D 3	TCF 40D 3	TCF 40D 4	
Interpole barrier[2]	**2EA/SET**	TQQ 4BA 3PLINE		

※ 1] For both line and load side of breaker, 2EA shall be ordered.
2] Supplied as standard component
Required quantity for both line and load side of breaker: 2 pole 4EA, 3 pole 4EA, 4 pole 6EA

Specifications and Standard Order Codes

▪ Standard order code and unit

• Fixed thermal & fixed instantaneous / Thermal magnetic trip

40/45℃

Model / Breaking capacity at AC380/415V	Rated current	2 pole		3 pole		4 pole		Specification	Category
		Code	Unit (EA)	Code	Unit (EA)	Code	Unit (EA)		
UCB400R 30kA	250A	UCB400R 2PT4S0000C 00250	3	UCB400R 3PT4S0000C 00250	3	UCB400R 4PT4S0000C 00250	2	Screw type terminal connection, No option, 50/60Hz	MCCB /M2
	300A	UCB400R 2PT4S0000C 00300	3	UCB400R 3PT4S0000C 00300	3	UCB400R 4PT4S0000C 00300	2		
	320A	UCB400R 2PT4S0000C 00320	3	UCB400R 3PT4S0000C 00320	3	UCB400R 4PT4S0000C 00320	2		
	350A	UCB400R 2PT4S0000C 00350	3	UCB400R 3PT4S0000C 00350	3	UCB400R 4PT4S0000C 00350	2		
	400A	UCB400R 2PT4S0000C 00400	3	UCB400R 3PT4S0000C 00400	3	UCB400R 4PT4S0000C 00400	2		
UCB400S 42kA	250A	UCB400S 2PT4S0000C 00250	3	UCB400S 3PT4S0000C 00250	3	UCB400S 4PT4S0000C 00250	2		
	300A	UCB400S 2PT4S0000C 00300	3	UCB400S 3PT4S0000C 00300	3	UCB400S 4PT4S0000C 00300	2		
	320A	UCB400S 2PT4S0000C 00320	3	UCB400S 3PT4S0000C 00320	3	UCB400S 4PT4S0000C 00320	2		
	350A	UCB400S 2PT4S0000C 00350	3	UCB400S 3PT4S0000C 00350	3	UCB400S 4PT4S0000C 00350	2		
	400A	UCB400S 2PT4S0000C 00400	3	UCB400S 3PT4S0000C 00400	3	UCB400S 4PT4S0000C 00400	2		
UCB400H 65kA	250A	UCB400H 2PT4S0000C 00250	3	UCB400H 3PT4S0000C 00250	3	UCB400H 4PT4S0000C 00250	2		
	300A	UCB400H 2PT4S0000C 00300	3	UCB400H 3PT4S0000C 00300	3	UCB400H 4PT4S0000C 00300	2		
	320A	UCB400H 2PT4S0000C 00320	3	UCB400H 3PT4S0000C 00320	3	UCB400H 4PT4S0000C 00320	2		
	350A	UCB400H 2PT4S0000C 00350	3	UCB400H 3PT4S0000C 00350	3	UCB400H 4PT4S0000C 00350	2		
	400A	UCB400H 2PT4S0000C 00400	3	UCB400H 3PT4S0000C 00400	3	UCB400H 4PT4S0000C 00400	2		
UCB400L 100kA	250A	UCB400L 2PT4S0000C 00250	3	UCB400L 3PT4S0000C 00250	3	UCB400L 4PT4S0000C 00250	2		
	300A	UCB400L 2PT4S0000C 00300	3	UCB400L 3PT4S0000C 00300	3	UCB400L 4PT4S0000C 00300	2		
	320A	UCB400L 2PT4S0000C 00320	3	UCB400L 3PT4S0000C 00320	3	UCB400L 4PT4S0000C 00320	2		
	350A	UCB400L 2PT4S0000C 00350	3	UCB400L 3PT4S0000C 00350	3	UCB400L 4PT4S0000C 00350	2		
	400A	UCB400L 2PT4S0000C 00400	3	UCB400L 3PT4S0000C 00400	3	UCB400L 4PT4S0000C 00400	2		

50℃

Model / Breaking capacity at AC380/415V	Rated current	2 pole		3 pole		4 pole		Specification	Category
		Code	Unit (EA)	Code	Unit (EA)	Code	Unit (EA)		
UCB400R 30kA	250A	UCB400R 2PT5S0000C 00250	3	UCB400R 3PT5S0000C 00250	3	UCB400R 4PT5S0000C 00250	2	Screw type terminal connection, No option, 50/60Hz	MCCB /M2
	300A	UCB400R 2PT5S0000C 00300	3	UCB400R 3PT5S0000C 00300	3	UCB400R 4PT5S0000C 00300	2		
	320A	UCB400R 2PT5S0000C 00320	3	UCB400R 3PT5S0000C 00320	3	UCB400R 4PT5S0000C 00320	2		
	350A	UCB400R 2PT5S0000C 00350	3	UCB400R 3PT5S0000C 00350	3	UCB400R 4PT5S0000C 00350	2		
	400A	UCB400R 2PT5S0000C 00400	3	UCB400R 3PT5S0000C 00400	3	UCB400R 4PT5S0000C 00400	2		
UCB400S 42kA	250A	UCB400S 2PT5S0000C 00250	3	UCB400S 3PT5S0000C 00250	3	UCB400S 4PT5S0000C 00250	2		
	300A	UCB400S 2PT5S0000C 00300	3	UCB400S 3PT5S0000C 00300	3	UCB400S 4PT5S0000C 00300	2		
	320A	UCB400S 2PT5S0000C 00320	3	UCB400S 3PT5S0000C 00320	3	UCB400S 4PT5S0000C 00320	2		
	350A	UCB400S 2PT5S0000C 00350	3	UCB400S 3PT5S0000C 00350	3	UCB400S 4PT5S0000C 00350	2		
	400A	UCB400S 2PT5S0000C 00400	3	UCB400S 3PT5S0000C 00400	3	UCB400S 4PT5S0000C 00400	2		
UCB400H 65kA	250A	UCB400H 2PT5S0000C 00250	3	UCB400H 3PT5S0000C 00250	3	UCB400H 4PT5S0000C 00250	2		
	300A	UCB400H 2PT5S0000C 00300	3	UCB400H 3PT5S0000C 00300	3	UCB400H 4PT5S0000C 00300	2		
	320A	UCB400H 2PT5S0000C 00320	3	UCB400H 3PT5S0000C 00320	3	UCB400H 4PT5S0000C 00320	2		
	350A	UCB400H 2PT5S0000C 00350	3	UCB400H 3PT5S0000C 00350	3	UCB400H 4PT5S0000C 00350	2		
	400A	UCB400H 2PT5S0000C 00400	3	UCB400H 3PT5S0000C 00400	3	UCB400H 4PT5S0000C 00400	2		
UCB400L 100kA	250A	UCB400L 2PT5S0000C 00250	3	UCB400L 3PT5S0000C 00250	3	UCB400L 4PT5S0000C 00250	2		
	300A	UCB400L 2PT5S0000C 00300	3	UCB400L 3PT5S0000C 00300	3	UCB400L 4PT5S0000C 00300	2		
	320A	UCB400L 2PT5S0000C 00320	3	UCB400L 3PT5S0000C 00320	3	UCB400L 4PT5S0000C 00320	2		
	350A	UCB400L 2PT5S0000C 00350	3	UCB400L 3PT5S0000C 00350	3	UCB400L 4PT5S0000C 00350	2		
	400A	UCB400L 2PT5S0000C 00400	3	UCB400L 3PT5S0000C 00400	3	UCB400L 4PT5S0000C 00400	2		

• Adjustable thermal & fixed instantaneous / Thermal magnetic trip

40/45℃

Model / Breaking capacity at AC380/415V	Rated current	2 pole		3 pole		4 pole		Specification	Category
		Code	Unit (EA)	Code	Unit (EA)	Code	Unit (EA)		
UCB400R 30kA	250A	UCB400R 2PT4S0000C 00250F	3	UCB400R 3PT4S0000C 00250F	3	UCB400R 4PT4S0000C 00250F	2	Screw type terminal connection, No option, 50/60Hz	MCCB /M2
	300A	UCB400R 2PT4S0000C 00300F	3	UCB400R 3PT4S0000C 00300F	3	UCB400R 4PT4S0000C 00300F	2		
	320A	UCB400R 2PT4S0000C 00320F	3	UCB400R 3PT4S0000C 00320F	3	UCB400R 4PT4S0000C 00320F	2		
	350A	UCB400R 2PT4S0000C 00350F	3	UCB400R 3PT4S0000C 00350F	3	UCB400R 4PT4S0000C 00350F	2		
	400A	UCB400R 2PT4S0000C 00400F	3	UCB400R 3PT4S0000C 00400F	3	UCB400R 4PT4S0000C 00400F	2		
UCB400S 42kA	250A	UCB400S 2PT4S0000C 00250F	3	UCB400S 3PT4S0000C 00250F	3	UCB400S 4PT4S0000C 00250F	2		
	300A	UCB400S 2PT4S0000C 00300F	3	UCB400S 3PT4S0000C 00300F	3	UCB400S 4PT4S0000C 00300F	2		
	320A	UCB400S 2PT4S0000C 00320F	3	UCB400S 3PT4S0000C 00320F	3	UCB400S 4PT4S0000C 00320F	2		
	350A	UCB400S 2PT4S0000C 00350F	3	UCB400S 3PT4S0000C 00350F	3	UCB400S 4PT4S0000C 00350F	2		
	400A	UCB400S 2PT4S0000C 00400F	3	UCB400S 3PT4S0000C 00400F	3	UCB400S 4PT4S0000C 00400F	2		
UCB400H 65kA	250A	UCB400H 2PT4S0000C 00250F	3	UCB400H 3PT4S0000C 00250F	3	UCB400H 4PT4S0000C 00250F	2		
	300A	UCB400H 2PT4S0000C 00300F	3	UCB400H 3PT4S0000C 00300F	3	UCB400H 4PT4S0000C 00300F	2		
	320A	UCB400H 2PT4S0000C 00320F	3	UCB400H 3PT4S0000C 00320F	3	UCB400H 4PT4S0000C 00320F	2		
	350A	UCB400H 2PT4S0000C 00350F	3	UCB400H 3PT4S0000C 00350F	3	UCB400H 4PT4S0000C 00350F	2		
	400A	UCB400H 2PT4S0000C 00400F	3	UCB400H 3PT4S0000C 00400F	3	UCB400H 4PT4S0000C 00400F	2		
UCB400L 100kA	250A	UCB400L 2PT4S0000C 00250F	3	UCB400L 3PT4S0000C 00250F	3	UCB400L 4PT4S0000C 00250F	2		
	300A	UCB400L 2PT4S0000C 00300F	3	UCB400L 3PT4S0000C 00300F	3	UCB400L 4PT4S0000C 00300F	2		
	320A	UCB400L 2PT4S0000C 00320F	3	UCB400L 3PT4S0000C 00320F	3	UCB400L 4PT4S0000C 00320F	2		
	350A	UCB400L 2PT4S0000C 00350F	3	UCB400L 3PT4S0000C 00350F	3	UCB400L 4PT4S0000C 00350F	2		
	400A	UCB400L 2PT4S0000C 00400F	3	UCB400L 3PT4S0000C 00400F	3	UCB400L 4PT4S0000C 00400F	2		

50℃

Model / Breaking capacity at AC380/415V	Rated current	2 pole		3 pole		4 pole		Specification	Category
		Code	Unit (EA)	Code	Unit (EA)	Code	Unit (EA)		
UCB400R 30kA	250A	UCB400R 2PT5S0000C 00250F	3	UCB400R 3PT5S0000C 00250F	3	UCB400R 4PT5S0000C 00250F	2	Screw type terminal connection, No option, 50/60Hz	MCCB /M2
	300A	UCB400R 2PT5S0000C 00300F	3	UCB400R 3PT5S0000C 00300F	3	UCB400R 4PT5S0000C 00300F	2		
	320A	UCB400R 2PT5S0000C 00320F	3	UCB400R 3PT5S0000C 00320F	3	UCB400R 4PT5S0000C 00320F	2		
	350A	UCB400R 2PT5S0000C 00350F	3	UCB400R 3PT5S0000C 00350F	3	UCB400R 4PT5S0000C 00350F	2		
	400A	UCB400R 2PT5S0000C 00400F	3	UCB400R 3PT5S0000C 00400F	3	UCB400R 4PT5S0000C 00400F	2		
UCB400S 42kA	250A	UCB400S 2PT5S0000C 00250F	3	UCB400S 3PT5S0000C 00250F	3	UCB400S 4PT5S0000C 00250F	2		
	300A	UCB400S 2PT5S0000C 00300F	3	UCB400S 3PT5S0000C 00300F	3	UCB400S 4PT5S0000C 00300F	2		
	320A	UCB400S 2PT5S0000C 00320F	3	UCB400S 3PT5S0000C 00320F	3	UCB400S 4PT5S0000C 00320F	2		
	350A	UCB400S 2PT5S0000C 00350F	3	UCB400S 3PT5S0000C 00350F	3	UCB400S 4PT5S0000C 00350F	2		
	400A	UCB400S 2PT5S0000C 00400F	3	UCB400S 3PT5S0000C 00400F	3	UCB400S 4PT5S0000C 00400F	2		
UCB400H 65kA	250A	UCB400H 2PT5S0000C 00250F	3	UCB400H 3PT5S0000C 00250F	3	UCB400H 4PT5S0000C 00250F	2		
	300A	UCB400H 2PT5S0000C 00300F	3	UCB400H 3PT5S0000C 00300F	3	UCB400H 4PT5S0000C 00300F	2		
	320A	UCB400H 2PT5S0000C 00320F	3	UCB400H 3PT5S0000C 00320F	3	UCB400H 4PT5S0000C 00320F	2		
	350A	UCB400H 2PT5S0000C 00350F	3	UCB400H 3PT5S0000C 00350F	3	UCB400H 4PT5S0000C 00350F	2		
	400A	UCB400H 2PT5S0000C 00400F	3	UCB400H 3PT5S0000C 00400F	3	UCB400H 4PT5S0000C 00400F	2		
UCB400L 100kA	250A	UCB400L 2PT5S0000C 00250F	3	UCB400L 3PT5S0000C 00250F	3	UCB400L 4PT5S0000C 00250F	2		
	300A	UCB400L 2PT5S0000C 00300F	3	UCB400L 3PT5S0000C 00300F	3	UCB400L 4PT5S0000C 00300F	2		
	320A	UCB400L 2PT5S0000C 00320F	3	UCB400L 3PT5S0000C 00320F	3	UCB400L 4PT5S0000C 00320F	2		
	350A	UCB400L 2PT5S0000C 00350F	3	UCB400L 3PT5S0000C 00350F	3	UCB400L 4PT5S0000C 00350F	2		
	400A	UCB400L 2PT5S0000C 00400F	3	UCB400L 3PT5S0000C 00400F	3	UCB400L 4PT5S0000C 00400F	2		

Specifications and Standard Order Codes

| UCB type / 630AF |

- UCB630R 45kA
- UCB630S 65kA
- UCB630H 85kA
- UCB630L 100kA



				UCB630R	UCB630S	UCB630H	UCB630L
Number of poles (P)				∗2, 3, 4			
Degree of protection (without terminal bus bar)				IP20			
Utilization category				A			
Suitability of isolation				○			
Protection				overload, inst., short-circuit			
Rating	Rated current (A)			500, 630			
	Rated insulation voltage [Ui] (V)			AC690			
	Rated operational voltage [Ue] (V)			AC660			
				DC250			
	Rated impulse withstand voltage [Uimp] (kV)			6			
Rated short-circuit breaking capacity IEC 60947-2 K 60947-2	Ultimate [Icu] (kA r.m.s.)	AC600/660V, 50-60Hz		22	25	35	35
		AC480/500V, 50-60Hz		25	45	50	65
		AC440/460V, 50-60Hz		35	50	65	85
		AC380/415V, 50-60Hz		**45**	**65**	**85**	**100**
		AC220/240V, 50-60Hz		50	100	100	125
		DC250V		20	40	40	40
		DC125V		30	50	50	60
	Service [Ics]	% of [Icu]		50			
Trip mechanism & Protection characteristics	Thermal magnetic	Fixed thermal, Fixed instantaneous		○			
			INST	10×In			
		Adjustable thermal, Fixed instantaneous	LTD	(0.8–0.9–1)×In			
			INST	10×In			
Mounting	Direct mounting by screw			○			
	Plug-in	for Switchboard	Both line & load side	○ [1]			
			Line side only	○ [1]			
Terminal connection		Screw		○			
		Bus bar		○			
Durability (times)	Mechanical operation			20,000			
	Electrical operation			6,000			
Dimensions (mm) 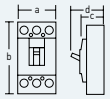		2/3/4P	a Width	210[2]/210/280			
			b Height	280			
			c Depth	110			
			d	145			
Weight (kg, breaker only)		2/3/4P		8.7/9.5/12.5			

※ - The breaking capacity highlighted with blue and thick type is standard nominal value for each model in this catalogue.
1) Available for 3P breaker
2) ∗2P breaker has same dimension as 3P breaker, but the middle pole is removed.

▪ Accessories

• Signal

Auxiliary switch	1C, right-hand-side					
	AUX 46D R1					
Trip alarm switch	1C, left-hand-side					
	ALT 46D L1					
Shunt trip [1]	DC24V	DC100-110V	AC100-120V	AC200-230V	AC380-415V	AC440-480V
	SHT 46D A	SHT 46D C	SHT 46D F	SHT 46D H	SHT 46D B	SHT 46D D
Under voltage trip [2]	DC24V	DC100-110V	AC100-120V	AC200-230V	AC380-415V	AC440-480V
	∗UVT 46D J	∗UVT 46D L	∗UVT 46D N	∗UVT 46D P	∗UVT 46D Q	∗UVT 46D R

※ 1] The permissible operating voltage: 85-110% of rated voltage for AC , 75-125% for DC
2] The permissible operating voltage: 85-110% of rated voltage(AC), 85-125% of rated voltage(DC)
The tripping voltage: 20-70% of rated voltage(AC/DC)
Be sure not to use UVT for the electrical interlock system.
∗Reset is possible without power.

• Operating

Operating handle [1]	**Power supply direction**		Upper	Right	Left
	Surface	**S type**	TFG 46DS U4	TFG 46DS R4	TFG 46DS L4
	Extended	**S type**	TFH 46DS		
Motor operator [2]			DC24V	AC/DC110V	AC/DC220V
			MOT 68E DC24	MOT 68E ADC110	MOT 68E ADC220
Mechanical interlock			2 pole	3 pole	4 pole
			MIF 80E 3	MIF 80E 3	MIF 80E 4
Padlock plate [3]			PLD 40D		
Extension handle [4]			THA 46D		

※ 1] For detail type information, please refer to page 195-202.
2] Motor operator is not recommended for marine application.
3] Padlock is not supplied. 4] Supplied as standard component

• Mounting

Plug-in [1]	**Structure**		For both line & load side	For line side only
	Mounting base		TDM 5BA [3]	TDM 5BA
	Connection block [2]	**2C contact**	TYA 5/2 [4]	–
		5C contact	TYA 5/5 [4]	–

※ 1] Available for 3P breaker
2] Connection blocks are required for internal accessory installation in both line & load side plug-in type 3P breaker.
3] 2EA are required for both line & load side plug-in type 3P breaker.
4] TYA type connection blocks are to be installed with separate mounting angle. Separate mounting angle is not supplied.

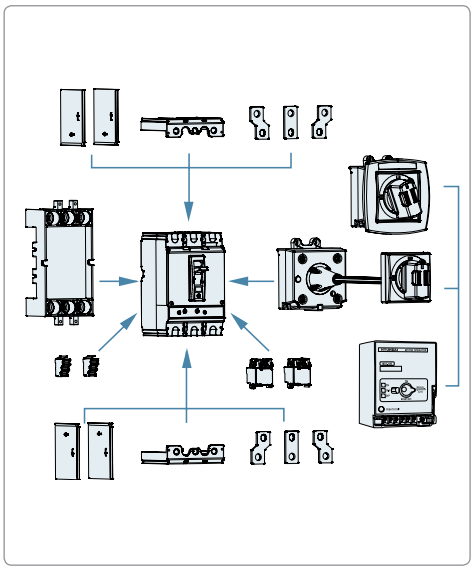

• Terminal

Terminal bus bar	2 pole (4EA/SET)	3 pole (6EA/SET)	4 pole (8EA/SET)	
	TBB 6S 2	TBB 6S 3	TBB 6S 4	
Cage terminal block	3EA/SET		4EA/SET	
	CTB 80E 3S		CTB 80E 4S	
Terminal cover [1]	2 pole	3 pole	4 pole	
	TCF 80E 3	TCF 80E 3	TCF 80E 4	
Interpole barrier [2]	**2EA/SET**	TQQ 5BA 3PLINE		

※ 1] For both line and load side of breaker, 2EA shall be ordered.
2] Supplied as standard component
Required quantity for both line and load side of breaker: 2 pole 4EA, 3 pole 4EA, 4 pole 6EA

▪ Standard order code and unit

※ Please refer to page 82.

Specifications and Standard Order Codes

| UCB type / 800AF |

- UCB800R 45kA
- UCB800S 65kA
- UCB800H 85kA
- UCB800L 100kA



				UCB800R	UCB800S	UCB800H	UCB800L
Number of poles (P)				∗2, 3, 4			
Degree of protection (without terminal bus bar)				IP20			
Utilization category				A			
Suitability of isolation				○			
Protection				overload, inst., short-circuit			
Rating	Rated current (A)			700, 800			
	Rated insulation voltage [Ui] (V)			AC690			
	Rated operational voltage [Ue] (V)			AC660			
				DC250			
	Rated impulse withstand voltage [Uimp] (kV)			6			
Rated short-circuit breaking capacity IEC 60947-2 K 60947-2	Ultimate [Icu] (kA r.m.s.)	AC600/660V, 50-60Hz		25	25	35	35
		AC480/500V, 50-60Hz		35	45	50	65
		AC440/460V, 50-60Hz		35	50	65	85
		AC380/415V, 50-60Hz		45	65	85	100
		AC220/240V, 50-60Hz		50	100	100	125
		DC250V		20	40	40	40
		DC125V		30	50	50	60
	Service [Ics]	% of [Icu]		50			
Trip mechanism & Protection characteristics	Thermal magnetic	Fixed thermal, Fixed instantaneous		○			
			INST	10×In			
		Adjustable thermal, Fixed instantaneous	LTD	(0.8–0.9–1)×In			
			INST	10×In			
Mounting	Direct mounting by screw			○			
	Plug-in	for Switchboard	Both line & load side	○ [1]			
			Line side only	○ [1]			
Terminal connection		Screw		○			
		Bus bar		○			
Durability (times)	Mechanical operation			10,000			
	Electrical operation			3,000			
Dimensions (mm) 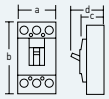		2/3/4P	a Width	210 [2]/210/280			
			b Height	280			
			c Depth	110			
			d	145			
Weight (kg, breaker only)		2/3/4P		8.7/9.5/12.5			

※ - The breaking capacity highlighted with blue and thick type is standard nominal value for each model in this catalogue.
1) Available for 3P breaker
2) ∗2P breaker has same dimension as 3P breaker, but the middle pole is removed.

▪ Accessories

• Signal

Auxiliary switch	1C, right-hand-side					
	AUX 46D R1					
Trip alarm switch	1C, left-hand-side					
	ALT 46D L1					
Shunt trip[1]	DC24V	DC100-110V	AC100-120V	AC200-230V	AC380-415V	AC440-480V
	SHT 46D A	SHT 46D C	SHT 46D F	SHT 46D H	SHT 46D B	SHT 46D D
Under voltage trip[2]	DC24V	DC100-110V	AC100-120V	AC200-230V	AC380-415V	AC440-480V
	*UVT 46D J	*UVT 46D L	*UVT 46D N	*UVT 46D P	*UVT 46D Q	*UVT 46D R

※ 1] The permissible operating voltage: 85-110% of rated voltage for AC , 75-125% for DC
2] The permissible operating voltage: 85-110% of rated voltage(AC), 85-125% of rated voltage(DC)
The tripping voltage: 20-70% of rated voltage(AC/DC)
Be sure not to use UVT for the electrical interlock system.
*Reset is possible without power.

• Operating

Operating handle[1]	**Power supply direction**		Upper	Right	Left
	Surface	**S type**	TFG 46DS U4	TFG 46DS R4	TFG 46DS L4
	Extended	**S type**	TFH 46DS		
Motor operator[2]			DC24V	AC/DC110V	AC/DC220V
			MOT 68E DC24	MOT 68E ADC110	MOT 68E ADC220
Mechanical interlock			2 pole	3 pole	4 pole
			MIF 80E 3	MIF 80E 3	MIF 80E 4
Padlock plate[3]			PLD 40D		
Extension handle[4]			THA 46D		

※ 1] For detail type information, please refer to page no. 195-202.
2] Motor operator is not recommended for marine application.
3] Padlock is not supplied. 4] Supplied as standard component

• Mounting

Plug-in[1]	**Structure**		For both line & load side	For line side only
	Mounting base		TDM 5BA[3]	TDM 5BA
	Connection block[2]	**2C contact**	TYA 5/2[4]	–
		5C contact	TYA 5/5[4]	–

※ 1] Available for 3P breaker
2] Connection blocks are required for internal accessory installation in both line & load side plug-in type 3P breaker.
3] 2EA are required for both line & load side plug-in type 3p breaker.
4] TYA type connection blocks are to be installed with separate mounting angle. Separate mounting angle is not supplied.

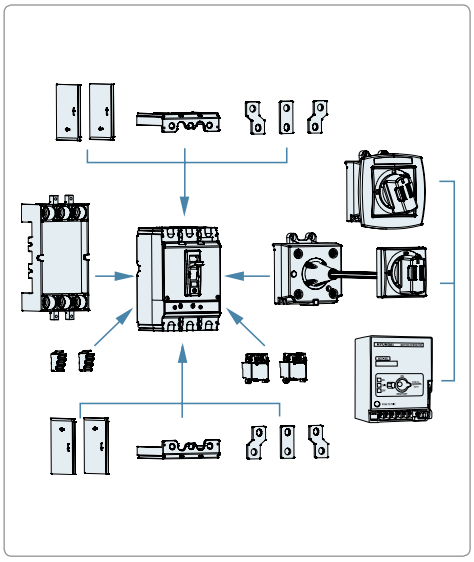

• Terminal

Terminal bus bar		2 pole (4EA/SET)	3 pole (6EA/SET)	4 pole (8EA/SET)
		TBB 8S 2	TBB 8S 3	TBB 8S 4
Cage terminal block		3EA/SET		4EA/SET
		CTB 80E 3S		CTB 80E 4S
Terminal cover[1]		2 pole	3 pole	4 pole
		TCF 80E 3	TCF 80E 3	TCF 80E 4
Interpole barrier[2]	**2EA/SET**	TQQ 5BA 3PLINE		

※ 1] For both line and load side of breaker, 2EA shall be ordered.
2] Supplied as standard component
Required quantity for both line and load side of breaker: 2 pole 4EA, 3 pole 4EA, 4 pole 6EA

▪ Standard order code and unit

※ Please refer to page 83.

Specifications and Standard Order Codes

▪ Standard order code and unit / UCB type 630AF

• Fixed thermal & fixed instantaneous / Thermal magnetic trip

40/45℃

Model / Breaking capacity at AC380/415V	Rated current	2 pole		3 pole		4 pole		Specification	Category
		Code	Unit (EA)	Code	Unit (EA)	Code	Unit (EA)		
UCB630R 45kA	500A	UCB630R 2PT4S0000C 00500	2	UCB630R 3PT4S0000C 00500	2	UCB630R 4PT4S0000C 00500	1	Screw type terminal connection, No option, 50/60Hz	MCCB /M2
	630A	UCB630R 2PT4S0000C 00630	2	UCB630R 3PT4S0000C 00630	2	UCB630R 4PT4S0000C 00630	1		
UCB630S 65kA	500A	UCB630S 2PT4S0000C 00500	2	UCB630S 3PT4S0000C 00500	2	UCB630S 4PT4S0000C 00500	1		
	630A	UCB630S 2PT4S0000C 00630	2	UCB630S 3PT4S0000C 00630	2	UCB630S 4PT4S0000C 00630	1		
UCB630H 85kA	500A	UCB630H 2PT4S0000C 00500	2	UCB630H 3PT4S0000C 00500	2	UCB630H 4PT4S0000C 00500	1		
	630A	UCB630H 2PT4S0000C 00630	2	UCB630H 3PT4S0000C 00630	2	UCB630H 4PT4S0000C 00630	1		
UCB630L 100kA	500A	UCB630L 2PT4S0000C 00500	2	UCB630L 3PT4S0000C 00500	2	UCB630L 4PT4S0000C 00500	1		
	630A	UCB630L 2PT4S0000C 00630	2	UCB630L 3PT4S0000C 00630	2	UCB630L 4PT4S0000C 00630	1		

50℃

Model / Breaking capacity at AC380/415V	Rated current	2 pole		3 pole		4 pole		Specification	Category
		Code	Unit (EA)	Code	Unit (EA)	Code	Unit (EA)		
UCB630R 45kA	500A	UCB630R 2PT5S0000C 00500	2	UCB630R 3PT5S0000C 00500	2	UCB630R 4PT5S0000C 00500	1	Screw type terminal connection, No option, 50/60Hz	MCCB /M2
	630A	UCB630R 2PT5S0000C 00630	2	UCB630R 3PT5S0000C 00630	2	UCB630R 4PT5S0000C 00630	1		
UCB630S 65kA	500A	UCB630S 2PT5S0000C 00500	2	UCB630S 3PT5S0000C 00500	2	UCB630S 4PT5S0000C 00500	1		
	630A	UCB630S 2PT5S0000C 00630	2	UCB630S 3PT5S0000C 00630	2	UCB630S 4PT5S0000C 00630	1		
UCB630H 85kA	500A	UCB630H 2PT5S0000C 00500	2	UCB630H 3PT5S0000C 00500	2	UCB630H 4PT5S0000C 00500	1		
	630A	UCB630H 2PT5S0000C 00630	2	UCB630H 3PT5S0000C 00630	2	UCB630H 4PT5S0000C 00630	1		
UCB630L 100kA	500A	UCB630L 2PT5S0000C 00500	2	UCB630L 3PT5S0000C 00500	2	UCB630L 4PT5S0000C 00500	1		
	630A	UCB630L 2PT5S0000C 00630	2	UCB630L 3PT5S0000C 00630	2	UCB630L 4PT5S0000C 00630	1		

• Adjustable thermal & fixed instantaneous / Thermal magnetic trip

40/45℃

Model / Breaking capacity at AC380/415V	Rated current	2 pole		3 pole		4 pole		Specification	Category
		Code	Unit (EA)	Code	Unit (EA)	Code	Unit (EA)		
UCB630R 45kA	500A	UCB630R 2PT4S0000C 00500F	2	UCB630R 3PT4S0000C 00500F	2	UCB630R 4PT4S0000C 00500F	1	Screw type terminal connection, No option, 50/60Hz	MCCB /M2
	630A	UCB630R 2PT4S0000C 00630F	2	UCB630R 3PT4S0000C 00630F	2	UCB630R 4PT4S0000C 00630F	1		
UCB630S 65kA	500A	UCB630S 2PT4S0000C 00500F	2	UCB630S 3PT4S0000C 00500F	2	UCB630S 4PT4S0000C 00500F	1		
	630A	UCB630S 2PT4S0000C 00630F	2	UCB630S 3PT4S0000C 00630F	2	UCB630S 4PT4S0000C 00630F	1		
UCB630H 85kA	500A	UCB630H 2PT4S0000C 00500F	2	UCB630H 3PT4S0000C 00500F	2	UCB630H 4PT4S0000C 00500F	1		
	630A	UCB630H 2PT4S0000C 00630F	2	UCB630H 3PT4S0000C 00630F	2	UCB630H 4PT4S0000C 00630F	1		
UCB630L 100kA	500A	UCB630L 2PT4S0000C 00500F	2	UCB630L 3PT4S0000C 00500F	2	UCB630L 4PT4S0000C 00500F	1		
	630A	UCB630L 2PT4S0000C 00630F	2	UCB630L 3PT4S0000C 00630F	2	UCB630L 4PT4S0000C 00630F	1		

50℃

Model / Breaking capacity at AC380/415V	Rated current	2 pole		3 pole		4 pole		Specification	Category
		Code	Unit (EA)	Code	Unit (EA)	Code	Unit (EA)		
UCB630R 45kA	500A	UCB630R 2PT5S0000C 00500F	2	UCB630R 3PT5S0000C 00500F	2	UCB630R 4PT5S0000C 00500F	1	Screw type terminal connection, No option, 50/60Hz	MCCB /M2
	630A	UCB630R 2PT5S0000C 00630F	2	UCB630R 3PT5S0000C 00630F	2	UCB630R 4PT5S0000C 00630F	1		
UCB630S 65kA	500A	UCB630S 2PT5S0000C 00500F	2	UCB630S 3PT5S0000C 00500F	2	UCB630S 4PT5S0000C 00500F	1		
	630A	UCB630S 2PT5S0000C 00630F	2	UCB630S 3PT5S0000C 00630F	2	UCB630S 4PT5S0000C 00630F	1		
UCB630H 85kA	500A	UCB630H 2PT5S0000C 00500F	2	UCB630H 3PT5S0000C 00500F	2	UCB630H 4PT5S0000C 00500F	1		
	630A	UCB630H 2PT5S0000C 00630F	2	UCB630H 3PT5S0000C 00630F	2	UCB630H 4PT5S0000C 00630F	1		
UCB630L 100kA	500A	UCB630L 2PT5S0000C 00500F	2	UCB630L 3PT5S0000C 00500F	2	UCB630L 4PT5S0000C 00500F	1		
	630A	UCB630L 2PT5S0000C 00630F	2	UCB630L 3PT5S0000C 00630F	2	UCB630L 4PT5S0000C 00630F	1		

▪ Standard order code and unit / UCB type 800AF

• Fixed thermal & fixed instantaneous / Thermal magnetic trip

40/45℃

Model / Breaking capacity at AC380/415V	Rated current	2 pole		3 pole		4 pole		Specification	Category
		Code	Unit (EA)	Code	Unit (EA)	Code	Unit (EA)		
UCB800R 45kA	700A	UCB800R 2PT4S0000C 00700	2	UCB800R 3PT4S0000C 00700	2	UCB800R 4PT4S0000C 00700	1	Screw type terminal connection, No option, 50/60Hz	MCCB /M2
	800A	UCB800R 2PT4S0000C 00800	2	UCB800R 3PT4S0000C 00800	2	UCB800R 4PT4S0000C 00800	1		
UCB800S 65kA	700A	UCB800S 2PT4S0000C 00700	2	UCB800S 3PT4S0000C 00700	2	UCB800S 4PT4S0000C 00700	1		
	800A	UCB800S 2PT4S0000C 00800	2	UCB800S 3PT4S0000C 00800	2	UCB800S 4PT4S0000C 00800	1		
UCB800H 85kA	700A	UCB800H 2PT4S0000C 00700	2	UCB800H 3PT4S0000C 00700	2	UCB800H 4PT4S0000C 00700	1		
	800A	UCB800H 2PT4S0000C 00800	2	UCB800H 3PT4S0000C 00800	2	UCB800H 4PT4S0000C 00800	1		
UCB800L 100kA	700A	UCB800L 2PT4S0000C 00700	2	UCB800L 3PT4S0000C 00700	2	UCB800L 4PT4S0000C 00700	1		
	800A	UCB800L 2PT4S0000C 00800	2	UCB800L 3PT4S0000C 00800	2	UCB800L 4PT4S0000C 00800	1		

50℃

Model / Breaking capacity at AC380/415V	Rated current	2 pole		3 pole		4 pole		Specification	Category
		Code	Unit (EA)	Code	Unit (EA)	Code	Unit (EA)		
UCB800R 45kA	700A	UCB800R 2PT5S0000C 00700	2	UCB800R 3PT5S0000C 00700	2	UCB800R 4PT5S0000C 00700	1	Screw type terminal connection, No option, 50/60Hz	MCCB /M2
	800A	UCB800R 2PT5S0000C 00800	2	UCB800R 3PT5S0000C 00800	2	UCB800R 4PT5S0000C 00800	1		
UCB800S 65kA	700A	UCB800S 2PT5S0000C 00700	2	UCB800S 3PT5S0000C 00700	2	UCB800S 4PT5S0000C 00700	1		
	800A	UCB800S 2PT5S0000C 00800	2	UCB800S 3PT5S0000C 00800	2	UCB800S 4PT5S0000C 00800	1		
UCB800H 85kA	700A	UCB800H 2PT5S0000C 00700	2	UCB800H 3PT5S0000C 00700	2	UCB800H 4PT5S0000C 00700	1		
	800A	UCB800H 2PT5S0000C 00800	2	UCB800H 3PT5S0000C 00800	2	UCB800H 4PT5S0000C 00800	1		
UCB800L 100kA	700A	UCB800L 2PT5S0000C 00700	2	UCB800L 3PT5S0000C 00700	2	UCB800L 4PT5S0000C 00700	1		
	800A	UCB800L 2PT5S0000C 00800	2	UCB800L 3PT5S0000C 00800	2	UCB800L 4PT5S0000C 00800	1		

• Adjustable thermal & fixed instantaneous / Thermal magnetic trip

40/45℃

Model / Breaking capacity at AC380/415V	Rated current	2 pole		3 pole		4 pole		Specification	Category
		Code	Unit (EA)	Code	Unit (EA)	Code	Unit (EA)		
UCB800R 45kA	700A	UCB800R 2PT4S0000C 00700F	2	UCB800R 3PT4S0000C 00700F	2	UCB800R 4PT4S0000C 00700F	1	Screw type terminal connection, No option, 50/60Hz	MCCB /M2
	800A	UCB800R 2PT4S0000C 00800F	2	UCB800R 3PT4S0000C 00800F	2	UCB800R 4PT4S0000C 00800F	1		
UCB800S 65kA	700A	UCB800S 2PT4S0000C 00700F	2	UCB800S 3PT4S0000C 00700F	2	UCB800S 4PT4S0000C 00700F	1		
	800A	UCB800S 2PT4S0000C 00800F	2	UCB800S 3PT4S0000C 00800F	2	UCB800S 4PT4S0000C 00800F	1		
UCB800H 85kA	700A	UCB800H 2PT4S0000C 00700F	2	UCB800H 3PT4S0000C 00700F	2	UCB800H 4PT4S0000C 00700F	1		
	800A	UCB800H 2PT4S0000C 00800F	2	UCB800H 3PT4S0000C 00800F	2	UCB800H 4PT4S0000C 00800F	1		
UCB800L 100kA	700A	UCB800L 2PT4S0000C 00700F	2	UCB800L 3PT4S0000C 00700F	2	UCB800L 4PT4S0000C 00700F	1		
	800A	UCB800L 2PT4S0000C 00800F	2	UCB800L 3PT4S0000C 00800F	2	UCB800L 4PT4S0000C 00800F	1		

50℃

Model / Breaking capacity at AC380/415V	Rated current	2 pole		3 pole		4 pole		Specification	Category
		Code	Unit (EA)	Code	Unit (EA)	Code	Unit (EA)		
UCB800R 45kA	700A	UCB800R 2PT5S0000C 00700F	2	UCB800R 3PT5S0000C 00700F	2	UCB800R 4PT5S0000C 00700F	1	Screw type terminal connection, No option, 50/60Hz	MCCB /M2
	800A	UCB800R 2PT5S0000C 00800F	2	UCB800R 3PT5S0000C 00800F	2	UCB800R 4PT5S0000C 00800F	1		
UCB800S 65kA	700A	UCB800S 2PT5S0000C 00700F	2	UCB800S 3PT5S0000C 00700F	2	UCB800S 4PT5S0000C 00700F	1		
	800A	UCB800S 2PT5S0000C 00800F	2	UCB800S 3PT5S0000C 00800F	2	UCB800S 4PT5S0000C 00800F	1		
UCB800H 85kA	700A	UCB800H 2PT5S0000C 00700F	2	UCB800H 3PT5S0000C 00700F	2	UCB800H 4PT5S0000C 00700F	1		
	800A	UCB800H 2PT5S0000C 00800F	2	UCB800H 3PT5S0000C 00800F	2	UCB800H 4PT5S0000C 00800F	1		
UCB800L 100kA	700A	UCB800L 2PT5S0000C 00700F	2	UCB800L 3PT5S0000C 00700F	2	UCB800L 4PT5S0000C 00700F	1		
	800A	UCB800L 2PT5S0000C 00800F	2	UCB800L 3PT5S0000C 00800F	2	UCB800L 4PT5S0000C 00800F	1		

Specifications and Standard Order Codes

| UCB type / 1000AF |

- UCB1000S 100kA
- UCB1000L 130kA

					UCB1000S	UCB1000L
						
Number of poles (P)					3, 4	
Degree of protection (without terminal bus bar)					IP20	
Utilization category					A	
Suitability of isolation					○	
Protection					overload, inst., short-circuit	
Rating	Rated current (A)				505-1,000	
	Rated insulation voltage [Ui] (V)				AC750	
	Rated operational voltage [Ue] (V)				AC690	
	Rated impulse withstand voltage [Uimp] (kV)				8	
Rated short-circuit breaking capacity IEC 60947-2 K 60947-2	Ultimate [Icu] (kA r.m.s.)	AC600/660V, 50-60Hz			40	60
		AC480/500V, 50-60Hz			75	100
		AC440/460V, 50-60Hz			75	100
		AC380/415V, 50-60Hz			100	130
		AC220/240V, 50-60Hz			100	150
	Service [Ics]	% of [Icu]			50	
Trip mechanism & Protection characteristics	Electronic	Long time delay		LTD	(0.5-1)[1] × In (15 setting)	
		Short time delay		STD	(2-4-6-8-10) × Ir	
		Instantaneous		INST	(3-6-8-10-11) × In	
		Ground fault trip		GFT	(0.2-0.3-0.4) × In	
		Pre-trip alarm		PTA	0.9 × In	
		I^2T lamp			○	
		Pick-up LED			○	
Mounting	Direct mounting by screw				○	
Terminal connection	Bus bar				○	
Durability (times)	Mechanical operation				10,000	
	Electrical operation				3,000	
Dimensions (mm) 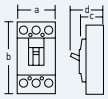	3/4P	a	Width		210/280	210/280
		b	Height		370	370
		c	Depth		110	200
		d			159	249
Weight (kg, breaker only)	3/4P				13/17	25/33

※ - The breaking capacity highlighted with blue and thick type is standard nominal value for each model in this catalogue.
1] (0.5-1): (0.63-0.8-1)x(0.8-0.85-0.9-0.95-1)

▪ Accessories

• Signal

Auxiliary switch	1C, right-hand-side	2C, right-hand-side	3C, right-hand-side			
	AUX 80NE R1	AUX 80NE R2	AUX 80NE R3			
Trip alarm switch	1C, right-hand-side					
	ALT 80NE R1					
Shunt trip [1]	DC24V	DC100-110V	AC100-120V	AC200-230V	AC380-415V	AC440-480V
	SHT 120NE A	SHT 120NE C	SHT 120NE F	SHT 120NE H	SHT 120NE B	SHT 120NE D
Under voltage trip [2]	DC24V	DC100-110V	AC100-120V	AC200-230V	AC380-415V	AC440-480V
	UVT 120NE J	UVT 120NE L	UVT 120NE N	UVT 120NE P	UVT 120NE Q	UVT 120NE R

※ 1] The permissible operating voltage: 85-110% of rated voltage for AC , 75-125% for DC
2] The permissible operating voltage: 85-110% of rated voltage(AC), 85-125% of rated voltage(DC)
The tripping voltage: 20-70% of rated voltage(AC/DC)
Be sure not to use UVT for the electrical interlock system.

• Operating

Motor operator [1]	DC24V	AC/DC110V	AC/DC220V
	MOT 80NE DC24	MOT 80NE ADC110	MOT 80NE ADC220
Padlock plate [2]	PLD 120NE		
Extension handle [3]	THA 120NE		

※ 1] Motor operator is not recommended for marine application.
2] Padlock is not supplied.
3] Supplied as standard component

• Terminal

Interpole barrier [1]	**2EA/SET**	TQQ 80NE 3P

※ 1] Supplied as standard component
Required quantity for both line and load side of breaker: 3 pole 4EA, 4 pole 6EA

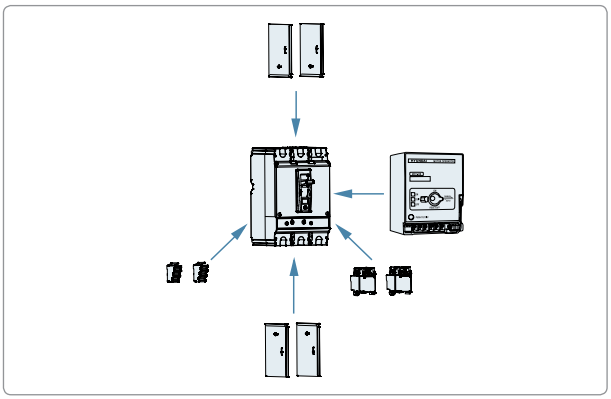

▪ Standard order code and unit

• Electronic - LTD, STD, INST trip & PTA

Model / Breaking capacity at AC380/415V	Rated current	3 pole		4 pole		Specification	Category
		Code	Unit (EA)	Code	Unit (EA)		
UCB1000S 100kA	1000A	UCB1000S 3PESB0000X 01000	1	UCB1000S 4PESB0000X 01000	1	Bus bar type terminal connection, No option, 50Hz	MCCB /M3
UCB1000L 130kA	1000A	UCB1000L 3PESB0000X 01000	1	UCB1000L 4PESB0000X 01000	1		
UCB1000S 100kA	1000A	UCB1000S 3PESB0000Y 01000	1	UCB1000S 4PESB0000Y 01000	1	Bus bar type terminal connection, No option, 60Hz	
UCB1000L 130kA	1000A	UCB1000L 3PESB0000Y 01000	1	UCB1000S 4PESB0000Y 01000	1		

• Electronic - LTD, STD, INST, GFT trip & PTA

Model / Breaking capacity at AC380/415V	Rated current	3 pole		4 pole		Specification	Category
		Code	Unit (EA)	Code	Unit (EA)		
UCB1000S 100kA	1000A	UCB1000S 3PEGB0000X 01000	1	UCB1000S 4PEGB0000X 01000	1	Bus bar type terminal connection, No option, 50Hz	MCCB /M3
UCB1000L 130kA	1000A	UCB1000L 3PEGB0000X 01000	1	UCB1000L 4PEGB0000X 01000	1		
UCB1000S 100kA	1000A	UCB1000S 3PEGB0000Y 01000	1	UCB1000S 4PEGB0000Y 01000	1	Bus bar type terminal connection, No option, 60Hz	
UCB1000L 130kA	1000A	UCB1000L 3PEGB0000Y 01000	1	UCB1000L 4PEGB0000Y 01000	1		

Specifications and Standard Order Codes

| UCB type / 1250AF |

- UCB1250S 100kA
- UCB1250L 130kA

					UCB1250S	UCB1250L
						
Number of poles (P)					3, 4	
Degree of protection (without terminal bus bar)					IP20	
Utilization category					A	
Suitability of isolation					○	
Protection					overload, inst., short-circuit	
Rating	Rated current (A)				630-1,250	
	Rated insulation voltage [Ui] (V)				AC750	
	Rated operational voltage [Ue] (V)				AC690	
	Rated impulse withstand voltage [Uimp] (kV)				8	
Rated short-circuit breaking capacity IEC 60947-2 K 60947-2	Ultimate [Icu] (kA r.m.s.)	AC600/660V, 50-60Hz			40	60
		AC480/500V, 50-60Hz			75	100
		AC440/460V, 50-60Hz			75	100
		AC380/415V, 50-60Hz			100	130
		AC220/240V, 50-60Hz			100	150
	Service [Ics]	% of [Icu]			50	
Trip mechanism & Protection characteristics	Electronic	Long time delay		LTD	(0.5-1)[1]×In (15 setting)	
		Short time delay		STD	(2-4-6-8-10)×Ir	
		Instantaneous		INST	(3-6-8-10-11)×In	
		Ground fault trip		GFT	(0.2-0.3-0.4)×In	
		Pre-trip alarm		PTA	0.9×In	
		I^2T lamp			○	
		Pick-up LED			○	
Mounting	Direct mounting by screw				○	
Terminal connection	Bus bar				○	
Durability (times)	Mechanical operation				10,000	
	Electrical operation (times)				3,000	
Dimensions (mm) 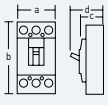	3/4P	a	Width		210/280	210/280
		b	Height		370	370
		c	Depth		110	200
		d			159	249
Weight (kg, breaker only)	3/4P				13.5/17.5	25.5/33.5

※ - The breaking capacity highlighted with blue and thick type is standard nominal value for each model in this catalogue.
1] (0.5-1): (0.63-0.8-1)x(0.8-0.85-0.9-0.95-1)

▪ Accessories

• Signal

Auxiliary switch	1C, right-hand-side	2C, right-hand-side	3C, right-hand-side			
	AUX 80NE R1	AUX 80NE R2	AUX 80NE R3			
Trip alarm switch	1C, right-hand-side					
	ALT 80NE R1					
Shunt trip [1]	DC24V	DC100-110V	AC100-120V	AC200-230V	AC380-415V	AC440-480V
	SHT 120NE A	SHT 120NE C	SHT 120NE F	SHT 120NE H	SHT 120NE B	SHT 120NE D
Under voltage trip [2]	DC24V	DC100-110V	AC100-120V	AC200-230V	AC380-415V	AC440-480V
	UVT 120NE J	UVT 120NE L	UVT 120NE N	UVT 120NE P	UVT 120NE Q	UVT 120NE R

※ 1] The permissible operating voltage: 85-110% of rated voltage for AC , 75-125% for DC
2] The permissible operating voltage: 85-110% of rated voltage(AC), 85-125% of rated voltage(DC)
The tripping voltage: 20-70% of rated voltage(AC/DC)
Be sure not to use UVT for the electrical interlock system.

• Operating

Motor operator [1]	DC24V	AC/DC110V	AC/DC220V
	MOT 80NE DC24	MOT 80NE ADC110	MOT 80NE ADC220
Padlock plate [2]	PLD 120NE		
Extension handle [3]	THA 120NE		

※ 1] Motor operator is not recommended for marine application.
2] Padlock is not supplied.
3] Supplied as standard component

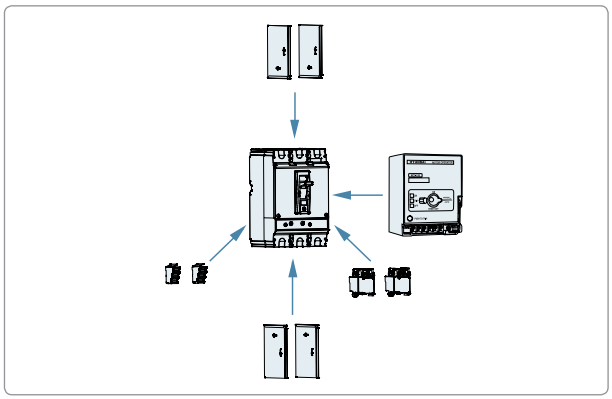

• Terminal

Interpole barrier [1]	**2EA/SET**	TQQ 80NE 3P

※ 1] Supplied as standard component
Required quantity for both line and load side of breaker: 3 pole 4EA, 4 pole 6EA

▪ Standard order code and unit

• Electronic - LTD, STD, INST trip & PTA

Model / Breaking capacity at AC380/415V	Rated current	3 pole		4 pole		Specification	Category
		Code	Unit (EA)	Code	Unit (EA)		
UCB1250S 100kA	1250A	UCB1250S 3PESB0000X 01250	1	UCB1250S 4PESB0000X 01250	1	Bus bar type terminal connection, No option, 50Hz	MCCB /M3
UCB1250L 130kA	1250A	UCB1250L 3PESB0000X 01250	1	UCB1250L 4PESB0000X 01250	1		
UCB1250S 100kA	1250A	UCB1250S 3PESB0000Y 01250	1	UCB1250S 4PESB0000Y 01250	1	Bus bar type terminal connection, No option, 60Hz	
UCB1250L 130kA	1250A	UCB1250L 3PESB0000Y 01250	1	UCB1250L 4PESB0000Y 01250	1		

• Electronic - LTD, STD, INST, GFT trip & PTA

Model / Breaking capacity at AC380/415V	Rated current	3 pole		4 pole		Specification	Category
		Code	Unit (EA)	Code	Unit (EA)		
UCB1250S 100kA	1250A	UCB1250S 3PEGB0000X 01250	1	UCB1250S 4PEGB0000X 01250	1	Bus bar type terminal connection, No option, 50Hz	MCCB /M3
UCB1250L 130kA	1250A	UCB1250L 3PEGB0000X 01250	1	UCB1250L 4PEGB0000X 01250	1		
UCB1250S 100kA	1250A	UCB1250S 3PEGB0000Y 01250	1	UCB1250S 4PEGB0000Y 01250	1	Bus bar type terminal connection, No option, 60Hz	
UCB1250L 130kA	1250A	UCB1250L 3PEGB0000Y 01250	1	UCB1250L 4PEGB0000Y 01250	1		

Specifications and Standard Order Codes

| UCB type / 1600AF |

• UCB1600S 65kA

					UCB1600S
					
Number of poles (P)					3
Degree of protection (without terminal bus bar)					IP20
Utilization category					A
Suitability of isolation					○
Protection					overload, inst., short-circuit
Rating	Rated current (A)				640-1,600
	Rated insulation voltage [Ui] (V)				AC750
	Rated operational voltage [Ue] (V)				AC690
	Rated impulse withstand voltage [Uimp] (kV)				8
Rated short-circuit breaking capacity IEC 60947-2 K 60947-2	Ultimate [Icu] (kA r.m.s.)	AC600/660V, 50-60Hz			25
		AC480/500V, 50-60Hz			35
		AC440/460V, 50-60Hz			45
		AC380/415V, 50-60Hz			65
		AC220/240V, 50-60Hz			100
	Service [Ics]	% of [Icu]			50
Trip mechanism & Protection characteristics	Electronic	Long time delay	LTD		(0.4-1)[1]×In (8 setting)
		Instantaneous	INST		(2-3-4-5-6-7-8-10)×In
		Pick-up LED			○
Mounting	Direct mounting by screw				○
Terminal connection	Bus bar				○
Durability (times)	Mechanical operation				10,000
	Electrical operation				3,000
Dimensions (mm) 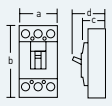	3/4P	a	Width		210
		b	Height		371
		c	Depth		151
		d			215
Weight (kg, breaker only)	3/4P				27

※ - The breaking capacity highlighted with blue and thick type is standard nominal value for each model in this catalogue.
1] (0.4-1): (0.4-0.5-0.6-0.7-0.8-0.9-0.95-1)

▪ Accessories

• Signal

Auxiliary switch	1C, right-hand-side	2C, right-hand-side				
	AUX 160NE R1	AUX 160NE R2				
Shunt trip[1]	DC24V	DC100-110V	AC100-120V	AC200-230V	AC380V	
	SHT 160NE A	SHT 160NE C	SHT 160NE F	SHT 160NE H	SHT 160NE B	
Under voltage trip[2]	DC24V	DC100-110V	AC100-120V	AC200-230V	AC380V	AC440V
	–	–	–	UVT 160NE P	UVT 160NE Q	UVT 160NE R

※ 1] The permissible operating voltage: 85-110% of rated voltage for AC , 75-125% for DC
2] The permissible operating voltage: 85-110% of rated voltage(AC), 85-125% of rated voltage(DC)
The tripping voltage: 20-70% of rated voltage(AC/DC)
Be sure not to use UVT for the electrical interlock system.

• Operating

Motor operator[1]	**AC220V**	MOT 160NE AC220
Extension handle[2]		THA 160NE

※ 1] Motor operator is not recommended for marine application.
2] Supplied as standard component

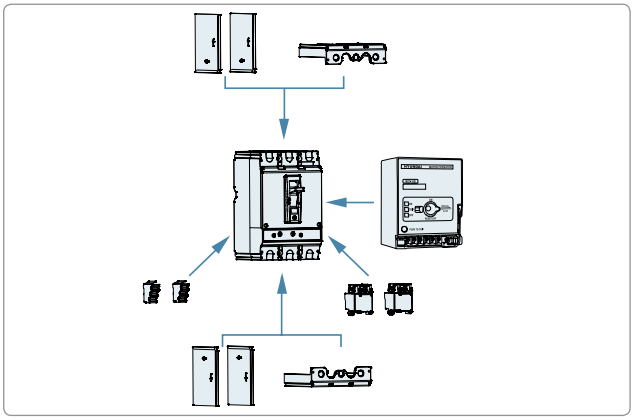

• Terminal

Terminal cover[1]		TCF 160NE 3
Interpole barrier[2]	**4EA/SET**	TQQ 160NE 3P

※ 1] For both line and load side of breaker, 2EA shall be ordered.
2] Supplied as standard component

▪ Standard order code and unit

• Electronic - LTD, INST trip

Model / Breaking capacity at AC380/415V	Rated current	3 pole		Specification	Category
		Code	Unit (EA)		
UCB1600S 65kA	1600A	UCB1600S 3PESB0000C 01600	1	Bus bar type terminal connection, No option, 50/60Hz	MCCB/M3

Specifications and Standard Order Codes

| UPB type / 125AF |

- UPB100S 85kA
- UPB100H 100kA
- UPB100L 130kA
- UPB100X 150kA

				UPB100S	UPB100H	UPB100L	UPB100X
							
Number of poles (P)				3, 4			
Degree of protection (with terminal cover)				IP20			
Utilization category				A			
Suitability of isolation				○			
Protection				overload, inst., short-circuit			
Rating	Rated current (A)		Thermal magnetic type	15, 16, 20, 25, 30, 32, 40, 50, 60, 63, 75, 80, 100, 125			
			Electronic type	50-125			
	Rated insulation voltage [Ui] (V)			AC750			
	Rated operational voltage [Ue] (V)			AC690			
				DC500 [1]			
	Rated impulse withstand voltage [Uimp] (kV)			8			
Rated short-circuit breaking capacity IEC 60947-2 K 60947-2	Ultimate [Icu] (kA r.m.s.)	AC660/690V, 50-60Hz		10	10	25	25
		AC480/500V, 50-60Hz		50	65	85	85
		AC440/460V, 50-60Hz		65	85	100	150
		AC380/415V, 50-60Hz		85	100	130	150
		AC220/240V, 50-60Hz		100	130	150	200
		DC250V		50 [1]	65 [1]	85 [1]	100 [1]
		DC125V		65 [1]	100 [1]	100 [1]	100 [1]
	Service [Ics]	% of [Icu]		100			
Trip mechanism & Protection characteristics	Thermal magnetic	Fixed thermal, Fixed instantaneous	INST	○ 10×In			
		Adjustable thermal, Fixed instantaneous	LTD INST	(0.8–0.9–1)×In 10×In			
	Electronic	Long time delay	LTD	50, 55, 63, 70, 80, 90, 100, 115, 125			
		Short time delay	STD	(NON-2-3-4-5-6-7-8-9-10)×Ir			
		Instantaneous	INST	11×In			
		Pre-trip alarm	PTA	0.9×Ir			
		Pick-up LED		○			
Mounting	Direct mounting by screw			○			
	Plug-in	for Switchboard	Both line & load side	○ [2]			
			Line side only	○ [2]			
Terminal connection	Screw			○			
	Bus bar			○			
Durability (times)	Mechanical operation			25,000			
	Electrical operation			10,000			
Dimensions (mm)	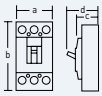	3/4P	a Width	105/140			
			b Height	165			
			c Depth	86.5			
			d	112			
Weight (kg, breaker only)	3/4P			1.8/2.2			

※ - The breaking capacity highlighted with blue and thick type is standard nominal value for each model in this catalogue.
1] DC is not applicable for electronic breaker. 2] Available for 3P breaker

▪ Accessories

• Signal

Auxiliary switch	1C, right-hand-side					
	AUX 12UP R1					
Trip alarm switch	1C, left-hand-side					
	ALT 12UP L1					
Shunt trip [1]	DC24V	DC100-110V	AC100-120V	AC200-230V	AC380-415V	AC440-480V
	SHT 12UP A	SHT 12UP C	SHT 12UP F	SHT 12UP H	SHT 12UP B	SHT 12UP D
Under voltage trip [2]	DC24V	DC100-110V	AC100-120V	AC200-230V	AC380-415V	AC440-480V
	*UVT 12UP J	*UVT 12UP L	*UVT 12UP N	*UVT 12UP P	*UVT 12UP Q	*UVT 12UP R

※ 1] The permissible operating voltage: 85-110% of rated voltage for AC , 75-125% for DC
2] The permissible operating voltage: 85-110% of rated voltage(AC), 85~125% of rated voltage(DC)
The tripping voltage: 20-70% of rated voltage(AC/DC)
Be sure not to use UVT for the electrical interlock system.
*Reset is possible without power.

• Operating

Operating handle[1]	Power supply direction		Upper	Right	Left
	Surface	S type	TFG 12UPS U4	TFG 12UPS R4	TFG 12UPS L4
		L type	TFG 12UPL U4	–	TFG 12UPL L4
	Extended	S type	TFH 12UPS		
		L type	TFH 12UPL		
Motor operator[2]			DC24V	AC/DC110V	AC/DC220V
			MOT 12UP DC24	MOT 12UP ADC110	MOT 12UP ADC220
Mechanical interlock			3 pole		4 pole
			MIF 12UP 3		MIF 12UP 4
Padlock plate[3]			PLD 12UP		

※ 1] For detail type information, please refer to page 195-202.
2] Motor operator is not recommended for marine application.
3] Padlock is not supplied.

• Mounting

Plug-in[1]	Structure		For both line & load side	For line side only
	Mounting base		TDM 12NEP	TDM 12NEF
	Connection block[2]	6C contact	CBM 26NE 6	–
		12C contact	CBM 26NE 6[3]	–

※ 1] Available for 3P breaker
2] Connection blocks are required for internal accessory installation in both line & load side plug-in type 3P breaker.
3] 2EA shall be ordered for 12C contact.

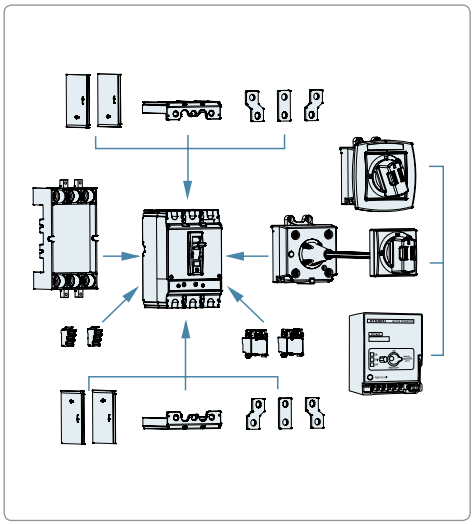

• Terminal

Terminal bus bar	3 pole (6EA/SET)	TBB 12NE 3
	4 pole (8EA/SET)	TBB 12NE 4
Cage terminal block	3EA/SET	CTB 12UP 3S
	4EA/SET	CTB 12UP 4S
Terminal cover[1]	3 pole	TCF 12UP 3
	4 pole	TCF 12UP 4
Interpole barrier[2]	4EA/SET	TQQ 12NE 3P

※ 1] For both line and load side of breaker, 2EA shall be ordered.
2] Supplied as standard component
Required quantity for both line and load side of breaker: 3 pole 4EA, 4 pole 6EA

▪ Standard order code and unit

• Electronic - LTD, STD, INST trip & PTA

Model / Breaking capacity at AC380/415V	Rated current	3 pole		4 pole		Specification	Category
		Code	Unit (EA)	Code	Unit (EA)		
UPB100S 85kA	125A	UPB100S 3PESS0000X 00125	8	UPB100S 4PESS0000X 00125	6	Screw type terminal connection, No option, 50Hz	MCCB/M3
UPB100H 100kA	125A	UPB100H 3PESS0000X 00125	8	UPB100H 4PESS0000X 00125	6		
UPB100L 130kA	125A	UPB100L 3PESS0000X 00125	8	UPB100L 4PESS0000X 00125	6		
UPB100X 150kA	125A	UPB100X 3PESS0000X 00125	8	UPB100X 4PESS0000X 00125	6		
UPB100S 85kA	125A	UPB100S 3PESS0000Y 00125	8	UPB100S 4PESS0000Y 00125	6	Screw type terminal connection, No option, 60Hz	
UPB100H 100kA	125A	UPB100H 3PESS0000Y 00125	8	UPB100H 4PESS0000Y 00125	6		
UPB100L 130kA	125A	UPB100L 3PESS0000Y 00125	8	UPB100L 4PESS0000Y 00125	6		
UPB100X 150kA	125A	UPB100X 3PESS0000Y 00125	8	UPB100X 4PESS0000Y 00125	6		

Specifications and Standard Order Codes

▪ Standard order code and unit

• Fixed thermal & fixed instantaneous / Thermal magnetic trip

40/45℃

Model / Breaking capacity at AC380/415V	Rated current	3 pole		4 pole		Specification	Category
		Code	Unit (EA)	Code	Unit (EA)		
UPB100S 85kA	15A	UPB100S 3PT4S0000C 00015	8	UPB100S 4PT4S0000C 00015	6	Screw type terminal connection, No option, 50/60Hz	MCCB /M2
	16A	UPB100S 3PT4S0000C 00016	8	UPB100S 4PT4S0000C 00016	6		
	20A	UPB100S 3PT4S0000C 00020	8	UPB100S 4PT4S0000C 00020	6		
	25A	UPB100S 3PT4S0000C 00025	8	UPB100S 4PT4S0000C 00025	6		
	30A	UPB100S 3PT4S0000C 00030	8	UPB100S 4PT4S0000C 00030	6		
	32A	UPB100S 3PT4S0000C 00032	8	UPB100S 4PT4S0000C 00032	6		
	40A	UPB100S 3PT4S0000C 00040	8	UPB100S 4PT4S0000C 00040	6		
	50A	UPB100S 3PT4S0000C 00050	8	UPB100S 4PT4S0000C 00050	6		
	60A	UPB100S 3PT4S0000C 00060	8	UPB100S 4PT4S0000C 00060	6		
	63A	UPB100S 3PT4S0000C 00063	8	UPB100S 4PT4S0000C 00063	6		
	75A	UPB100S 3PT4S0000C 00075	8	UPB100S 4PT4S0000C 00075	6		
	80A	UPB100S 3PT4S0000C 00080	8	UPB100S 4PT4S0000C 00080	6		
	100A	UPB100S 3PT4S0000C 00100	8	UPB100S 4PT4S0000C 00100	6		
	125A	UPB100S 3PT4S0000C 00125	8	UPB100S 4PT4S0000C 00125	6		
UPB100H 100kA	15A	UPB100H 3PT4S0000C 00015	8	UPB100H 4PT4S0000C 00015	6		
	16A	UPB100H 3PT4S0000C 00016	8	UPB100H 4PT4S0000C 00016	6		
	20A	UPB100H 3PT4S0000C 00020	8	UPB100H 4PT4S0000C 00020	6		
	25A	UPB100H 3PT4S0000C 00025	8	UPB100H 4PT4S0000C 00025	6		
	30A	UPB100H 3PT4S0000C 00030	8	UPB100H 4PT4S0000C 00030	6		
	32A	UPB100H 3PT4S0000C 00032	8	UPB100H 4PT4S0000C 00032	6		
	40A	UPB100H 3PT4S0000C 00040	8	UPB100H 4PT4S0000C 00040	6		
	50A	UPB100H 3PT4S0000C 00050	8	UPB100H 4PT4S0000C 00050	6		
	60A	UPB100H 3PT4S0000C 00060	8	UPB100H 4PT4S0000C 00060	6		
	63A	UPB100H 3PT4S0000C 00063	8	UPB100H 4PT4S0000C 00063	6		
	75A	UPB100H 3PT4S0000C 00075	8	UPB100H 4PT4S0000C 00075	6		
	80A	UPB100H 3PT4S0000C 00080	8	UPB100H 4PT4S0000C 00080	6		
	100A	UPB100H 3PT4S0000C 00100	8	UPB100H 4PT4S0000C 00100	6		
	125A	UPB100H 3PT4S0000C 00125	8	UPB100H 4PT4S0000C 00125	6		
UPB100L 130kA	15A	UPB100L 3PT4S0000C 00015	8	UPB100L 4PT4S0000C 00015	6		
	16A	UPB100L 3PT4S0000C 00016	8	UPB100L 4PT4S0000C 00016	6		
	20A	UPB100L 3PT4S0000C 00020	8	UPB100L 4PT4S0000C 00020	6		
	25A	UPB100L 3PT4S0000C 00025	8	UPB100L 4PT4S0000C 00025	6		
	30A	UPB100L 3PT4S0000C 00030	8	UPB100L 4PT4S0000C 00030	6		
	32A	UPB100L 3PT4S0000C 00032	8	UPB100L 4PT4S0000C 00032	6		
	40A	UPB100L 3PT4S0000C 00040	8	UPB100L 4PT4S0000C 00040	6		
	50A	UPB100L 3PT4S0000C 00050	8	UPB100L 4PT4S0000C 00050	6		
	60A	UPB100L 3PT4S0000C 00060	8	UPB100L 4PT4S0000C 00060	6		
	63A	UPB100L 3PT4S0000C 00063	8	UPB100L 4PT4S0000C 00063	6		
	75A	UPB100L 3PT4S0000C 00075	8	UPB100L 4PT4S0000C 00075	6		
	80A	UPB100L 3PT4S0000C 00080	8	UPB100L 4PT4S0000C 00080	6		
	100A	UPB100L 3PT4S0000C 00100	8	UPB100L 4PT4S0000C 00100	6		
	125A	UPB100L 3PT4S0000C 00125	8	UPB100L 4PT4S0000C 00125	6		
UPB100X 150kA	15A	UPB100X 3PT4S0000C 00015	8	UPB100X 4PT4S0000C 00015	6		
	16A	UPB100X 3PT4S0000C 00016	8	UPB100X 4PT4S0000C 00016	6		
	20A	UPB100X 3PT4S0000C 00020	8	UPB100X 4PT4S0000C 00020	6		
	25A	UPB100X 3PT4S0000C 00025	8	UPB100X 4PT4S0000C 00025	6		
	30A	UPB100X 3PT4S0000C 00030	8	UPB100X 4PT4S0000C 00030	6		
	32A	UPB100X 3PT4S0000C 00032	8	UPB100X 4PT4S0000C 00032	6		
	40A	UPB100X 3PT4S0000C 00040	8	UPB100X 4PT4S0000C 00040	6		
	50A	UPB100X 3PT4S0000C 00050	8	UPB100X 4PT4S0000C 00050	6		
	60A	UPB100X 3PT4S0000C 00060	8	UPB100X 4PT4S0000C 00060	6		
	63A	UPB100X 3PT4S0000C 00063	8	UPB100X 4PT4S0000C 00063	6		
	75A	UPB100X 3PT4S0000C 00075	8	UPB100X 4PT4S0000C 00075	6		
	80A	UPB100X 3PT4S0000C 00080	8	UPB100X 4PT4S0000C 00080	6		
	100A	UPB100X 3PT4S0000C 00100	8	UPB100X 4PT4S0000C 00100	6		
	125A	UPB100X 3PT4S0000C 00125	8	UPB100X 4PT4S0000C 00125	6		

50℃

Model / Breaking capacity at AC380/415V	Rated current	3 pole		4 pole		Specification	Category
		Code	Unit (EA)	Code	Unit (EA)		
UPB100S 85kA	15A	UPB100S 3PT5S0000C 00015	8	UPB100S 4PT5S0000C 00015	6	Screw type terminal connection, No option, 50/60Hz	MCCB /M2
	16A	UPB100S 3PT5S0000C 00016	8	UPB100S 4PT5S0000C 00016	6		
	20A	UPB100S 3PT5S0000C 00020	8	UPB100S 4PT5S0000C 00020	6		
	25A	UPB100S 3PT5S0000C 00025	8	UPB100S 4PT5S0000C 00025	6		
	30A	UPB100S 3PT5S0000C 00030	8	UPB100S 4PT5S0000C 00030	6		
	32A	UPB100S 3PT5S0000C 00032	8	UPB100S 4PT5S0000C 00032	6		
	40A	UPB100S 3PT5S0000C 00040	8	UPB100S 4PT5S0000C 00040	6		
	50A	UPB100S 3PT5S0000C 00050	8	UPB100S 4PT5S0000C 00050	6		
	60A	UPB100S 3PT5S0000C 00060	8	UPB100S 4PT5S0000C 00060	6		
	63A	UPB100S 3PT5S0000C 00063	8	UPB100S 4PT5S0000C 00063	6		
	75A	UPB100S 3PT5S0000C 00075	8	UPB100S 4PT5S0000C 00075	6		
	80A	UPB100S 3PT5S0000C 00080	8	UPB100S 4PT5S0000C 00080	6		
	100A	UPB100S 3PT5S0000C 00100	8	UPB100S 4PT5S0000C 00100	6		
	125A	UPB100S 3PT5S0000C 00125	8	UPB100S 4PT5S0000C 00125	6		
UPB100H 100kA	15A	UPB100H 3PT5S0000C 00015	8	UPB100H 4PT5S0000C 00015	6		
	16A	UPB100H 3PT5S0000C 00016	8	UPB100H 4PT5S0000C 00016	6		
	20A	UPB100H 3PT5S0000C 00020	8	UPB100H 4PT5S0000C 00020	6		
	25A	UPB100H 3PT5S0000C 00025	8	UPB100H 4PT5S0000C 00025	6		
	30A	UPB100H 3PT5S0000C 00030	8	UPB100H 4PT5S0000C 00030	6		
	32A	UPB100H 3PT5S0000C 00032	8	UPB100H 4PT5S0000C 00032	6		
	40A	UPB100H 3PT5S0000C 00040	8	UPB100H 4PT5S0000C 00040	6		
	50A	UPB100H 3PT5S0000C 00050	8	UPB100H 4PT5S0000C 00050	6		
	60A	UPB100H 3PT5S0000C 00060	8	UPB100H 4PT5S0000C 00060	6		
	63A	UPB100H 3PT5S0000C 00063	8	UPB100H 4PT5S0000C 00063	6		
	75A	UPB100H 3PT5S0000C 00075	8	UPB100H 4PT5S0000C 00075	6		
	80A	UPB100H 3PT5S0000C 00080	8	UPB100H 4PT5S0000C 00080	6		
	100A	UPB100H 3PT5S0000C 00100	8	UPB100H 4PT5S0000C 00100	6		
	125A	UPB100H 3PT5S0000C 00125	8	UPB100H 4PT5S0000C 00125	6		
UPB100L 130kA	15A	UPB100L 3PT5S0000C 00015	8	UPB100L 4PT5S0000C 00015	6		
	16A	UPB100L 3PT5S0000C 00016	8	UPB100L 4PT5S0000C 00016	6		
	20A	UPB100L 3PT5S0000C 00020	8	UPB100L 4PT5S0000C 00020	6		
	25A	UPB100L 3PT5S0000C 00025	8	UPB100L 4PT5S0000C 00025	6		
	30A	UPB100L 3PT5S0000C 00030	8	UPB100L 4PT5S0000C 00030	6		
	32A	UPB100L 3PT5S0000C 00032	8	UPB100L 4PT5S0000C 00032	6		
	40A	UPB100L 3PT5S0000C 00040	8	UPB100L 4PT5S0000C 00040	6		
	50A	UPB100L 3PT5S0000C 00050	8	UPB100L 4PT5S0000C 00050	6		
	60A	UPB100L 3PT5S0000C 00060	8	UPB100L 4PT5S0000C 00060	6		
	63A	UPB100L 3PT5S0000C 00063	8	UPB100L 4PT5S0000C 00063	6		
	75A	UPB100L 3PT5S0000C 00075	8	UPB100L 4PT5S0000C 00075	6		
	80A	UPB100L 3PT5S0000C 00080	8	UPB100L 4PT5S0000C 00080	6		
	100A	UPB100L 3PT5S0000C 00100	8	UPB100L 4PT5S0000C 00100	6		
	125A	UPB100L 3PT5S0000C 00125	8	UPB100L 4PT5S0000C 00125	6		
UPB100X 150kA	15A	UPB100X 3PT5S0000C 00015	8	UPB100X 4PT5S0000C 00015	6		
	16A	UPB100X 3PT5S0000C 00016	8	UPB100X 4PT5S0000C 00016	6		
	20A	UPB100X 3PT5S0000C 00020	8	UPB100X 4PT5S0000C 00020	6		
	25A	UPB100X 3PT5S0000C 00025	8	UPB100X 4PT5S0000C 00025	6		
	30A	UPB100X 3PT5S0000C 00030	8	UPB100X 4PT5S0000C 00030	6		
	32A	UPB100X 3PT5S0000C 00032	8	UPB100X 4PT5S0000C 00032	6		
	40A	UPB100X 3PT5S0000C 00040	8	UPB100X 4PT5S0000C 00040	6		
	50A	UPB100X 3PT5S0000C 00050	8	UPB100X 4PT5S0000C 00050	6		
	60A	UPB100X 3PT5S0000C 00060	8	UPB100X 4PT5S0000C 00060	6		
	63A	UPB100X 3PT5S0000C 00063	8	UPB100X 4PT5S0000C 00063	6		
	75A	UPB100X 3PT5S0000C 00075	8	UPB100X 4PT5S0000C 00075	6		
	80A	UPB100X 3PT5S0000C 00080	8	UPB100X 4PT5S0000C 00080	6		
	100A	UPB100X 3PT5S0000C 00100	8	UPB100X 4PT5S0000C 00100	6		
	125A	UPB100X 3PT5S0000C 00125	8	UPB100X 4PT5S0000C 00125	6		

Specifications and Standard Order Codes

▪ Standard order code and unit

• Adjustable thermal & fixed instantaneous / Thermal magnetic trip

40/45℃

Model / Breaking capacity at AC380/415V	Rated current	3 pole		4 pole		Specification	Category
		Code	Unit (EA)	Code	Unit (EA)		
UPB100S 85kA	15A	UPB100S 3PT4S0000C 00015F	8	UPB100S 4PT4S0000C 00015F	6	Screw type terminal connection, No option, 50/60Hz	MCCB /M2
	16A	UPB100S 3PT4S0000C 00016F	8	UPB100S 4PT4S0000C 00016F	6		
	20A	UPB100S 3PT4S0000C 00020F	8	UPB100S 4PT4S0000C 00020F	6		
	25A	UPB100S 3PT4S0000C 00025F	8	UPB100S 4PT4S0000C 00025F	6		
	30A	UPB100S 3PT4S0000C 00030F	8	UPB100S 4PT4S0000C 00030F	6		
	32A	UPB100S 3PT4S0000C 00032F	8	UPB100S 4PT4S0000C 00032F	6		
	40A	UPB100S 3PT4S0000C 00040F	8	UPB100S 4PT4S0000C 00040F	6		
	50A	UPB100S 3PT4S0000C 00050F	8	UPB100S 4PT4S0000C 00050F	6		
	60A	UPB100S 3PT4S0000C 00060F	8	UPB100S 4PT4S0000C 00060F	6		
	63A	UPB100S 3PT4S0000C 00063F	8	UPB100S 4PT4S0000C 00063F	6		
	75A	UPB100S 3PT4S0000C 00075F	8	UPB100S 4PT4S0000C 00075F	6		
	80A	UPB100S 3PT4S0000C 00080F	8	UPB100S 4PT4S0000C 00080F	6		
	100A	UPB100S 3PT4S0000C 00100F	8	UPB100S 4PT4S0000C 00100F	6		
	125A	UPB100S 3PT4S0000C 00125F	8	UPB100S 4PT4S0000C 00125F	6		
UPB100H 100kA	15A	UPB100H 3PT4S0000C 00015F	8	UPB100H 4PT4S0000C 00015F	6		
	16A	UPB100H 3PT4S0000C 00016F	8	UPB100H 4PT4S0000C 00016F	6		
	20A	UPB100H 3PT4S0000C 00020F	8	UPB100H 4PT4S0000C 00020F	6		
	25A	UPB100H 3PT4S0000C 00025F	8	UPB100H 4PT4S0000C 00025F	6		
	30A	UPB100H 3PT4S0000C 00030F	8	UPB100H 4PT4S0000C 00030F	6		
	32A	UPB100H 3PT4S0000C 00032F	8	UPB100H 4PT4S0000C 00032F	6		
	40A	UPB100H 3PT4S0000C 00040F	8	UPB100H 4PT4S0000C 00040F	6		
	50A	UPB100H 3PT4S0000C 00050F	8	UPB100H 4PT4S0000C 00050F	6		
	60A	UPB100H 3PT4S0000C 00060F	8	UPB100H 4PT4S0000C 00060F	6		
	63A	UPB100H 3PT4S0000C 00063F	8	UPB100H 4PT4S0000C 00063F	6		
	75A	UPB100H 3PT4S0000C 00075F	8	UPB100H 4PT4S0000C 00075F	6		
	80A	UPB100H 3PT4S0000C 00080F	8	UPB100H 4PT4S0000C 00080F	6		
	100A	UPB100H 3PT4S0000C 00100F	8	UPB100H 4PT4S0000C 00100F	6		
	125A	UPB100H 3PT4S0000C 00125F	8	UPB100H 4PT4S0000C 00125F	6		
UPB100L 130kA	15A	UPB100L 3PT4S0000C 00015F	8	UPB100L 4PT4S0000C 00015F	6		
	16A	UPB100L 3PT4S0000C 00016F	8	UPB100L 4PT4S0000C 00016F	6		
	20A	UPB100L 3PT4S0000C 00020F	8	UPB100L 4PT4S0000C 00020F	6		
	25A	UPB100L 3PT4S0000C 00025F	8	UPB100L 4PT4S0000C 00025F	6		
	30A	UPB100L 3PT4S0000C 00030F	8	UPB100L 4PT4S0000C 00030F	6		
	32A	UPB100L 3PT4S0000C 00032F	8	UPB100L 4PT4S0000C 00032F	6		
	40A	UPB100L 3PT4S0000C 00040F	8	UPB100L 4PT4S0000C 00040F	6		
	50A	UPB100L 3PT4S0000C 00050F	8	UPB100L 4PT4S0000C 00050F	6		
	60A	UPB100L 3PT4S0000C 00060F	8	UPB100L 4PT4S0000C 00060F	6		
	63A	UPB100L 3PT4S0000C 00063F	8	UPB100L 4PT4S0000C 00063F	6		
	75A	UPB100L 3PT4S0000C 00075F	8	UPB100L 4PT4S0000C 00075F	6		
	80A	UPB100L 3PT4S0000C 00080F	8	UPB100L 4PT4S0000C 00080F	6		
	100A	UPB100L 3PT4S0000C 00100F	8	UPB100L 4PT4S0000C 00100F	6		
	125A	UPB100L 3PT4S0000C 00125F	8	UPB100L 4PT4S0000C 00125F	6		
UPB100X 150kA	15A	UPB100X 3PT4S0000C 00015F	8	UPB100X 4PT4S0000C 00015F	6		
	16A	UPB100X 3PT4S0000C 00016F	8	UPB100X 4PT4S0000C 00016F	6		
	20A	UPB100X 3PT4S0000C 00020F	8	UPB100X 4PT4S0000C 00020F	6		
	25A	UPB100X 3PT4S0000C 00025F	8	UPB100X 4PT4S0000C 00025F	6		
	30A	UPB100X 3PT4S0000C 00030F	8	UPB100X 4PT4S0000C 00030F	6		
	32A	UPB100X 3PT4S0000C 00032F	8	UPB100X 4PT4S0000C 00032F	6		
	40A	UPB100X 3PT4S0000C 00040F	8	UPB100X 4PT4S0000C 00040F	6		
	50A	UPB100X 3PT4S0000C 00050F	8	UPB100X 4PT4S0000C 00050F	6		
	60A	UPB100X 3PT4S0000C 00060F	8	UPB100X 4PT4S0000C 00060F	6		
	63A	UPB100X 3PT4S0000C 00063F	8	UPB100X 4PT4S0000C 00063F	6		
	75A	UPB100X 3PT4S0000C 00075F	8	UPB100X 4PT4S0000C 00075F	6		
	80A	UPB100X 3PT4S0000C 00080F	8	UPB100X 4PT4S0000C 00080F	6		
	100A	UPB100X 3PT4S0000C 00100F	8	UPB100X 4PT4S0000C 00100F	6		
	125A	UPB100X 3PT4S0000C 00125F	8	UPB100X 4PT4S0000C 00125F	6		

50℃

Model / Breaking capacity at AC380/415V	Rated current	3 pole		4 pole		Specification	Category
		Code	Unit (EA)	Code	Unit (EA)		
UPB100S 85kA	15A	UPB100S 3PT5S0000C 00015F	8	UPB100S 4PT5S0000C 00015F	6	Screw type terminal connection, No option, 50/60Hz	MCCB /M2
	16A	UPB100S 3PT5S0000C 00016F	8	UPB100S 4PT5S0000C 00016F	6		
	20A	UPB100S 3PT5S0000C 00020F	8	UPB100S 4PT5S0000C 00020F	6		
	25A	UPB100S 3PT5S0000C 00025F	8	UPB100S 4PT5S0000C 00025F	6		
	30A	UPB100S 3PT5S0000C 00030F	8	UPB100S 4PT5S0000C 00030F	6		
	32A	UPB100S 3PT5S0000C 00032F	8	UPB100S 4PT5S0000C 00032F	6		
	40A	UPB100S 3PT5S0000C 00040F	8	UPB100S 4PT5S0000C 00040F	6		
	50A	UPB100S 3PT5S0000C 00050F	8	UPB100S 4PT5S0000C 00050F	6		
	60A	UPB100S 3PT5S0000C 00060F	8	UPB100S 4PT5S0000C 00060F	6		
	63A	UPB100S 3PT5S0000C 00063F	8	UPB100S 4PT5S0000C 00063F	6		
	75A	UPB100S 3PT5S0000C 00075F	8	UPB100S 4PT5S0000C 00075F	6		
	80A	UPB100S 3PT5S0000C 00080F	8	UPB100S 4PT5S0000C 00080F	6		
	100A	UPB100S 3PT5S0000C 00100F	8	UPB100S 4PT5S0000C 00100F	6		
	125A	UPB100S 3PT5S0000C 00125F	8	UPB100S 4PT5S0000C 00125F	6		
UPB100H 100kA	15A	UPB100H 3PT5S0000C 00015F	8	UPB100H 4PT5S0000C 00015F	6		
	16A	UPB100H 3PT5S0000C 00016F	8	UPB100H 4PT5S0000C 00016F	6		
	20A	UPB100H 3PT5S0000C 00020F	8	UPB100H 4PT5S0000C 00020F	6		
	25A	UPB100H 3PT5S0000C 00025F	8	UPB100H 4PT5S0000C 00025F	6		
	30A	UPB100H 3PT5S0000C 00030F	8	UPB100H 4PT5S0000C 00030F	6		
	32A	UPB100H 3PT5S0000C 00032F	8	UPB100H 4PT5S0000C 00032F	6		
	40A	UPB100H 3PT5S0000C 00040F	8	UPB100H 4PT5S0000C 00040F	6		
	50A	UPB100H 3PT5S0000C 00050F	8	UPB100H 4PT5S0000C 00050F	6		
	60A	UPB100H 3PT5S0000C 00060F	8	UPB100H 4PT5S0000C 00060F	6		
	63A	UPB100H 3PT5S0000C 00063F	8	UPB100H 4PT5S0000C 00063F	6		
	75A	UPB100H 3PT5S0000C 00075F	8	UPB100H 4PT5S0000C 00075F	6		
	80A	UPB100H 3PT5S0000C 00080F	8	UPB100H 4PT5S0000C 00080F	6		
	100A	UPB100H 3PT5S0000C 00100F	8	UPB100H 4PT5S0000C 00100F	6		
	125A	UPB100H 3PT5S0000C 00125F	8	UPB100H 4PT5S0000C 00125F	6		
UPB100L 130kA	15A	UPB100L 3PT5S0000C 00015F	8	UPB100L 4PT5S0000C 00015F	6		
	16A	UPB100L 3PT5S0000C 00016F	8	UPB100L 4PT5S0000C 00016F	6		
	20A	UPB100L 3PT5S0000C 00020F	8	UPB100L 4PT5S0000C 00020F	6		
	25A	UPB100L 3PT5S0000C 00025F	8	UPB100L 4PT5S0000C 00025F	6		
	30A	UPB100L 3PT5S0000C 00030F	8	UPB100L 4PT5S0000C 00030F	6		
	32A	UPB100L 3PT5S0000C 00032F	8	UPB100L 4PT5S0000C 00032F	6		
	40A	UPB100L 3PT5S0000C 00040F	8	UPB100L 4PT5S0000C 00040F	6		
	50A	UPB100L 3PT5S0000C 00050F	8	UPB100L 4PT5S0000C 00050F	6		
	60A	UPB100L 3PT5S0000C 00060F	8	UPB100L 4PT5S0000C 00060F	6		
	63A	UPB100L 3PT5S0000C 00063F	8	UPB100L 4PT5S0000C 00063F	6		
	75A	UPB100L 3PT5S0000C 00075F	8	UPB100L 4PT5S0000C 00075F	6		
	80A	UPB100L 3PT5S0000C 00080F	8	UPB100L 4PT5S0000C 00080F	6		
	100A	UPB100L 3PT5S0000C 00100F	8	UPB100L 4PT5S0000C 00100F	6		
	125A	UPB100L 3PT5S0000C 00125F	8	UPB100L 4PT5S0000C 00125F	6		
UPB100X 150kA	15A	UPB100X 3PT5S0000C 00015F	8	UPB100X 4PT5S0000C 00015F	6		
	16A	UPB100X 3PT5S0000C 00016F	8	UPB100X 4PT5S0000C 00016F	6		
	20A	UPB100X 3PT5S0000C 00020F	8	UPB100X 4PT5S0000C 00020F	6		
	25A	UPB100X 3PT5S0000C 00025F	8	UPB100X 4PT5S0000C 00025F	6		
	30A	UPB100X 3PT5S0000C 00030F	8	UPB100X 4PT5S0000C 00030F	6		
	32A	UPB100X 3PT5S0000C 00032F	8	UPB100X 4PT5S0000C 00032F	6		
	40A	UPB100X 3PT5S0000C 00040F	8	UPB100X 4PT5S0000C 00040F	6		
	50A	UPB100X 3PT5S0000C 00050F	8	UPB100X 4PT5S0000C 00050F	6		
	60A	UPB100X 3PT5S0000C 00060F	8	UPB100X 4PT5S0000C 00060F	6		
	63A	UPB100X 3PT5S0000C 00063F	8	UPB100X 4PT5S0000C 00063F	6		
	75A	UPB100X 3PT5S0000C 00075F	8	UPB100X 4PT5S0000C 00075F	6		
	80A	UPB100X 3PT5S0000C 00080F	8	UPB100X 4PT5S0000C 00080F	6		
	100A	UPB100X 3PT5S0000C 00100F	8	UPB100X 4PT5S0000C 00100F	6		
	125A	UPB100X 3PT5S0000C 00125F	8	UPB100X 4PT5S0000C 00125F	6		

Specifications and Standard Order Codes

| UPB type / 160AF |

- UPB160S 85kA
- UPB160H 100kA
- UPB160L 130kA
- UPB160X 150kA

				UPB160S	UPB160H	UPB160L	UPB160X
							
Number of poles (P)				3, 4			
Degree of protection (with terminal cover)				IP20			
Utilization category				A			
Suitability of isolation				○			
Protection				overload, inst., short-circuit			
Rating	Rated current (A)		Thermal magnetic type	100, 125, 160			
			Electronic type	63-160			
	Rated insulation voltage [Ui] (V)			AC750			
	Rated operational voltage [Ue] (V)			AC690			
				DC500 [1]			
	Rated impulse withstand voltage [Uimp] (kV)			8			
Rated short-circuit breaking capacity IEC 60947-2 K 60947-2	Ultimate [Icu] (kA r.m.s.)	AC660/690V, 50-60Hz		10	10	25	25
		AC480/500V, 50-60Hz		50	65	85	85
		AC440/460V, 50-60Hz		65	85	100	150
		AC380/415V, 50-60Hz		85	100	130	150
		AC220/240V, 50-60Hz		100	130	150	200
		DC250V		50 [1]	65 [1]	85 [1]	100 [1]
		DC125V		65 [1]	100 [1]	100 [1]	100 [1]
	Service [Ics]	% of [Icu]		100			
Trip mechanism & Protection characteristics	Thermal magnetic	Fixed thermal, Fixed instantaneous	INST	○			
		Adjustable thermal,	LTD	10×In			
		Fixed instantaneous	INST	(0.8–0.9–1)×In			
		Adjustable thermal,	LTD	10×In			
		Adjustable instantaneous	INST	(0.8–0.9–1)×In			
	Electronic	Long time delay	LTD	(5-6-7-8-9-10)×In			
		Short time delay	STD	63, 70, 80, 90, 100, 110, 125, 140, 160			
		Instantaneous	INST	(NON-2-3-4-5-6-7-8-9-10)×Ir			
		Pre-trip alarm	PTA	11×In			
		Pick-up LED		0.9×Ir			
				○			
Mounting	Direct mounting by screw			○			
	Plug-in	for Switchboard	Both line & load side	○ [2]			
			Line side only	○ [2]			
Terminal connection		Screw		○			
		Bus bar		○			
Durability (times)	Mechanical operation			25,000			
	Electrical operation			10,000			
Dimensions (mm)	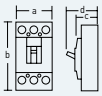	3/4P	a Width	105/140			
			b Height	165			
			c Depth	86.5			
			d	112			
Weight (kg, breaker only)		3/4P		2.0/2.4			

※ - The breaking capacity highlighted with blue and thick type is standard nominal value for each model in this catalogue.
1] DC is not applicable for electronic breaker. 2] Available for 3P breaker

▪ Accessories

• Signal

Auxiliary switch	1C, right-hand-side					
	AUX 12UP R1					
Trip alarm switch	1C, left-hand-side					
	ALT 12UP L1					
Shunt trip [1]	DC24V	DC100-110V	AC100-120V	AC200-230V	AC380-415V	AC440-480V
	SHT 12UP A	SHT 12UP C	SHT 12UP F	SHT 12UP H	SHT 12UP B	SHT 12UP D
Under voltage trip [2]	DC24V	DC100-110V	AC100-120V	AC200-230V	AC380-415V	AC440-480V
	*UVT 12UP J	*UVT 12UP L	*UVT 12UP N	*UVT 12UP P	*UVT 12UP Q	*UVT 12UP R

※ 1] The permissible operating voltage: 85-110% of rated voltage for AC , 75-125% for DC
2] The permissible operating voltage: 85-110% of rated voltage(AC), 85~125% of rated voltage(DC)
The tripping voltage: 20-70% of rated voltage(AC/DC)
Be sure not to use UVT for the electrical interlock system.
*Reset is possible without power.

• Operating

Operating handle[1]	Power supply direction		Upper	Right	Left
	Surface	S type	TFG 12UPS U4	TFG 12UPS R4	TFG 12UPS L4
		L type	TFG 12UPL U4	–	TFG 12UPL L4
	Extended	S type	TFH 12UPS		
		L type	TFH 12UPL		
Motor operator[2]			DC24V	AC/DC110V	AC/DC220V
			MOT 12UP DC24	MOT 12UP ADC110	MOT 12UP ADC220
Mechanical interlock			3 pole		4 pole
			MIF 12UP 3		MIF 12UP 4
Padlock plate[3]			PLD 12UP		

※ 1] For detail type information, please refer to page 195-202.
2] Motor operator is not recommended for marine application.
3] Padlock is not supplied.

• Mounting

Plug-in[1]	Structure		For both line & load side	For line side only
	Mounting base		TDM 12NEP	TDM 12NEF
	Connection block[2]	6C contact	CBM 26NE 6	–
		12C contact	CBM 26NE 6[3]	–

※ 1] Available for 3P breaker
2] Connection blocks are required for internal accessory installation in both line & load side plug-in type 3P breaker.
3] 2EA shall be ordered for 12C contact.

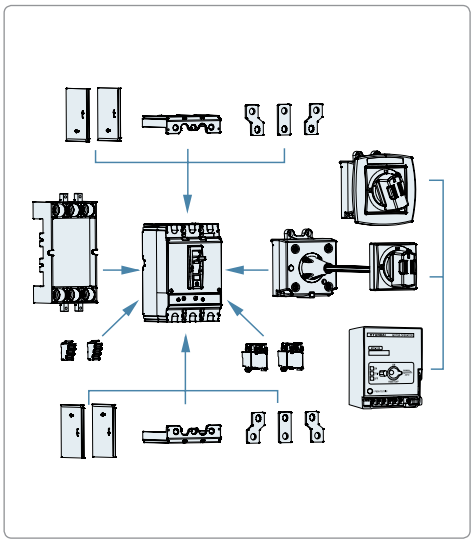

• Terminal

Terminal bus bar	3 pole (6EA/SET)	TBB 12NE 3
	4 pole (8EA/SET)	TBB 12NE 4
Cage terminal block	3EA/SET	CTB 12UP 3S
	4EA/SET	CTB 12UP 4S
Terminal cover[1]	3 pole	TCF 12UP 3
	4 pole	TCF 12UP 4
Interpole barrier[2]	4EA/SET	TQQ 12NE 3P

※ 1] For both line and load side of breaker, 2EA shall be ordered.
2] Supplied as standard component
Required quantity for both line and load side of breaker: 3 pole 4EA, 4 pole 6EA

▪ Standard order code and unit

• Electronic - LTD, STD, INST trip & PTA

Model / Breaking capacity at AC380/415V	Rated current	3 pole		4 pole		Specification	Category
		Code	Unit (EA)	Code	Unit (EA)		
UPB160S 85kA	160A	UPB160S 3PESS0000X 00160	8	UPB160S 4PESS0000X 00160	6	Screw type terminal connection, No option, 50Hz	MCCB/M3
UPB160H 100kA	160A	UPB160H 3PESS0000X 00160	8	UPB160H 4PESS0000X 00160	6		
UPB160L 130kA	160A	UPB160L 3PESS0000X 00160	8	UPB160L 4PESS0000X 00160	6		
UPB160X 150kA	160A	UPB160X 3PESS0000X 00160	8	UPB160X 4PESS0000X 00160	6		
UPB160S 85kA	160A	UPB160S 3PESS0000Y 00160	8	UPB160S 4PESS0000Y 00160	6	Screw type terminal connection, No option, 60Hz	
UPB160H 100kA	160A	UPB160H 3PESS0000Y 00160	8	UPB160H 4PESS0000Y 00160	6		
UPB160L 130kA	160A	UPB160L 3PESS0000Y 00160	8	UPB160L 4PESS0000Y 00160	6		
UPB160X 150kA	160A	UPB160X 3PESS0000Y 00160	8	UPB160X 4PESS0000Y 00160	6		

Specifications and Standard Order Codes

▪ Standard order code and unit

• Fixed thermal & fixed instantaneous / Thermal magnetic trip

40/45℃

Model / Breaking capacity at AC380/415V	Rated current	3 pole		4 pole		Specification	Category
		Code	Unit (EA)	Code	Unit (EA)		
UPB160S 85kA	100A	UPB160S 3PT4S0000C 00100	8	UPB160S 4PT4S0000C 00100	6	Screw type terminal connection, No option, 50/60Hz	MCCB /M2
	125A	UPB160S 3PT4S0000C 00125	8	UPB160S 4PT4S0000C 00125	6		
	160A	UPB160S 3PT4S0000C 00160	8	UPB160S 4PT4S0000C 00160	6		
UPB160H 100kA	100A	UPB160H 3PT4S0000C 00100	8	UPB160H 4PT4S0000C 00100	6		
	125A	UPB160H 3PT4S0000C 00125	8	UPB160H 4PT4S0000C 00125	6		
	160A	UPB160H 3PT4S0000C 00160	8	UPB160H 4PT4S0000C 00160	6		
UPB160L 130kA	100A	UPB160L 3PT4S0000C 00100	8	UPB160L 4PT4S0000C 00100	6		
	125A	UPB160L 3PT4S0000C 00125	8	UPB160L 4PT4S0000C 00125	6		
	160A	UPB160L 3PT4S0000C 00160	8	UPB160L 4PT4S0000C 00160	6		
UPB160X 150kA	100A	UPB160X 3PT4S0000C 00100	8	UPB160X 4PT4S0000C 00100	6		
	125A	UPB160X 3PT4S0000C 00125	8	UPB160X 4PT4S0000C 00125	6		
	160A	UPB160X 3PT4S0000C 00160	8	UPB160X 4PT4S0000C 00160	6		

50℃

Model / Breaking capacity at AC380/415V	Rated current	3 pole		4 pole		Specification	Category
		Code	Unit (EA)	Code	Unit (EA)		
UPB160S 85kA	100A	UPB160S 3PT5S0000C 00100	8	UPB160S 4PT5S0000C 00100	6	Screw type terminal connection, No option, 50/60Hz	MCCB /M2
	125A	UPB160S 3PT5S0000C 00125	8	UPB160S 4PT5S0000C 00125	6		
	160A	UPB160S 3PT5S0000C 00160	8	UPB160S 4PT5S0000C 00160	6		
UPB160H 100kA	100A	UPB160H 3PT5S0000C 00100	8	UPB160H 4PT5S0000C 00100	6		
	125A	UPB160H 3PT5S0000C 00125	8	UPB160H 4PT5S0000C 00125	6		
	160A	UPB160H 3PT5S0000C 00160	8	UPB160H 4PT5S0000C 00160	6		
UPB160L 130kA	100A	UPB160L 3PT5S0000C 00100	8	UPB160L 4PT5S0000C 00100	6		
	125A	UPB160L 3PT5S0000C 00125	8	UPB160L 4PT5S0000C 00125	6		
	160A	UPB160L 3PT5S0000C 00160	8	UPB160L 4PT5S0000C 00160	6		
UPB160X 150kA	100A	UPB160X 3PT5S0000C 00100	8	UPB160X 4PT5S0000C 00100	6		
	125A	UPB160X 3PT5S0000C 00125	8	UPB160X 4PT5S0000C 00125	6		
	160A	UPB160X 3PT5S0000C 00160	8	UPB160X 4PT5S0000C 00160	6		

• Adjustable thermal & fixed instantaneous / Thermal magnetic trip

40/45℃

Model / Breaking capacity at AC380/415V	Rated current	3 pole		4 pole		Specification	Category
		Code	Unit (EA)	Code	Unit (EA)		
UPB160S 85kA	100A	UPB160S 3PT4S0000C 00100F	8	UPB160S 4PT4S0000C 00100F	6	Screw type terminal connection, No option, 50/60Hz	MCCB /M2
	125A	UPB160S 3PT4S0000C 00125F	8	UPB160S 4PT4S0000C 00125F	6		
	160A	UPB160S 3PT4S0000C 00160F	8	UPB160S 4PT4S0000C 00160F	6		
UPB160H 100kA	100A	UPB160H 3PT4S0000C 00100F	8	UPB160H 4PT4S0000C 00100F	6		
	125A	UPB160H 3PT4S0000C 00125F	8	UPB160H 4PT4S0000C 00125F	6		
	160A	UPB160H 3PT4S0000C 00160F	8	UPB160H 4PT4S0000C 00160F	6		
UPB160L 130kA	100A	UPB160L 3PT4S0000C 00100F	8	UPB160L 4PT4S0000C 00100F	6		
	125A	UPB160L 3PT4S0000C 00125F	8	UPB160L 4PT4S0000C 00125F	6		
	160A	UPB160L 3PT4S0000C 00160F	8	UPB160L 4PT4S0000C 00160F	6		
UPB160X 150kA	100A	UPB160X 3PT4S0000C 00100F	8	UPB160X 4PT4S0000C 00100F	6		
	125A	UPB160X 3PT4S0000C 00125F	8	UPB160X 4PT4S0000C 00125F	6		
	160A	UPB160X 3PT4S0000C 00160F	8	UPB160X 4PT4S0000C 00160F	6		

50℃

Model / Breaking capacity at AC380/415V	Rated current	3 pole		4 pole		Specification	Category
		Code	Unit (EA)	Code	Unit (EA)		
UPB160S 85kA	100A	UPB160S 3PT5S0000C 00100F	8	UPB160S 4PT5S0000C 00100F	6	Screw type terminal connection, No option, 50/60Hz	MCCB /M2
	125A	UPB160S 3PT5S0000C 00125F	8	UPB160S 4PT5S0000C 00125F	6		
	160A	UPB160S 3PT5S0000C 00160F	8	UPB160S 4PT5S0000C 00160F	6		
UPB160H 100kA	100A	UPB160H 3PT5S0000C 00100F	8	UPB160H 4PT5S0000C 00100F	6		
	125A	UPB160H 3PT5S0000C 00125F	8	UPB160H 4PT5S0000C 00125F	6		
	160A	UPB160H 3PT5S0000C 00160F	8	UPB160H 4PT5S0000C 00160F	6		
UPB160L 130kA	100A	UPB160L 3PT5S0000C 00100F	8	UPB160L 4PT5S0000C 00100F	6		
	125A	UPB160L 3PT5S0000C 00125F	8	UPB160L 4PT5S0000C 00125F	6		
	160A	UPB160L 3PT5S0000C 00160F	8	UPB160L 4PT5S0000C 00160F	6		
UPB160X 150kA	100A	UPB160X 3PT5S0000C 00100F	8	UPB160X 4PT5S0000C 00100F	6		
	125A	UPB160X 3PT5S0000C 00125F	8	UPB160X 4PT5S0000C 00125F	6		
	160A	UPB160X 3PT5S0000C 00160F	8	UPB160X 4PT5S0000C 00160F	6		

• Adjustable thermal & adjustable instantaneous / Thermal magnetic trip

40/45℃

Model / Breaking capacity at AC380/415V	Rated current	3 pole		4 pole		Specification	Category
		Code	Unit (EA)	Code	Unit (EA)		
UPB160S 85kA	100A	UPB160S 3PT4S0000C 00100H	8	UPB160S 4PT4S0000C 00100H	6	Screw type terminal connection, No option, 50/60Hz	MCCB /M2
	125A	UPB160S 3PT4S0000C 00125H	8	UPB160S 4PT4S0000C 00125H	6		
	160A	UPB160S 3PT4S0000C 00160H	8	UPB160S 4PT4S0000C 00160H	6		
UPB160H 100kA	100A	UPB160H 3PT4S0000C 00100H	8	UPB160H 4PT4S0000C 00100H	6		
	125A	UPB160H 3PT4S0000C 00125H	8	UPB160H 4PT4S0000C 00125H	6		
	160A	UPB160H 3PT4S0000C 00160H	8	UPB160H 4PT4S0000C 00160H	6		
UPB160L 130kA	100A	UPB160L 3PT4S0000C 00100H	8	UPB160L 4PT4S0000C 00100H	6		
	125A	UPB160L 3PT4S0000C 00125H	8	UPB160L 4PT4S0000C 00125H	6		
	160A	UPB160L 3PT4S0000C 00160H	8	UPB160L 4PT4S0000C 00160H	6		
UPB160X 150kA	100A	UPB160X 3PT4S0000C 00100H	8	UPB160X 4PT4S0000C 00100H	6		
	125A	UPB160X 3PT4S0000C 00125H	8	UPB160X 4PT4S0000C 00125H	6		
	160A	UPB160X 3PT4S0000C 00160H	8	UPB160X 4PT4S0000C 00160H	6		

50℃

Model / Breaking capacity at AC380/415V	Rated current	3 pole		4 pole		Specification	Category
		Code	Unit (EA)	Code	Unit (EA)		
UPB160S 85kA	100A	UPB160S 3PT5S0000C 00100H	8	UPB160S 4PT5S0000C 00100H	6	Screw type terminal connection, No option, 50/60Hz	MCCB /M2
	125A	UPB160S 3PT5S0000C 00125H	8	UPB160S 4PT5S0000C 00125H	6		
	160A	UPB160S 3PT5S0000C 00160H	8	UPB160S 4PT5S0000C 00160H	6		
UPB160H 100kA	100A	UPB160H 3PT5S0000C 00100H	8	UPB160H 4PT5S0000C 00100H	6		
	125A	UPB160H 3PT5S0000C 00125H	8	UPB160H 4PT5S0000C 00125H	6		
	160A	UPB160H 3PT5S0000C 00160H	8	UPB160H 4PT5S0000C 00160H	6		
UPB160L 130kA	100A	UPB160L 3PT5S0000C 00100H	8	UPB160L 4PT5S0000C 00100H	6		
	125A	UPB160L 3PT5S0000C 00125H	8	UPB160L 4PT5S0000C 00125H	6		
	160A	UPB160L 3PT5S0000C 00160H	8	UPB160L 4PT5S0000C 00160H	6		
UPB160X 150kA	100A	UPB160X 3PT5S0000C 00100H	8	UPB160X 4PT5S0000C 00100H	6		
	125A	UPB160X 3PT5S0000C 00125H	8	UPB160X 4PT5S0000C 00125H	6		
	160A	UPB160X 3PT5S0000C 00160H	8	UPB160X 4PT5S0000C 00160H	6		

Specifications and Standard Order Codes

| UPB type / 250AF |

- UPB250S 85kA
- UPB250H 100kA
- UPB250L 130kA
- UPB250X 150kA






				UPB250S	UPB250H	UPB250L	UPB250X
Number of poles (P)				3, 4			
Degree of protection (with terminal cover)				IP20			
Utilization category				A			
Suitability of isolation				○			
Protection				overload, inst., short-circuit			
Rating	Rated current (A)		Thermal magnetic type	125, 150, 160, 175, 200, 225, 250			
			Electronic type	100-250			
	Rated insulation voltage [Ui] (V)			AC750			
	Rated operational voltage [Ue] (V)			AC690			
				DC500 [1]			
	Rated impulse withstand voltage [Uimp] (kV)			8			
Rated short-circuit breaking capacity IEC 60947-2 K 60947-2	Ultimate [Icu] (kA r.m.s.)	AC660/690V, 50-60Hz		10	10	25	25
		AC480/500V, 50-60Hz		50	65	85	85
		AC440/460V, 50-60Hz		65	85	100	150
		AC380/415V, 50-60Hz		85	100	130	150
		AC220/240V, 50-60Hz		100	130	150	200
		DC250V		50 [1]	65 [1]	85 [1]	100 [1]
		DC125V		65 [1]	100 [1]	100 [1]	100 [1]
	Service [Ics]	% of [Icu]		100			
Trip mechanism & Protection characteristics	Thermal magnetic	Fixed thermal,		○			
		Fixed instantaneous	INST	10×In			
		Adjustable thermal,	LTD	(0.8–0.9–1)×In			
		Fixed instantaneous	INST	10×In			
		Adjustable thermal,	LTD	(0.8–0.9–1)×In			
		Adjustable instantaneous	INST	(5-6-7-8-9-10)×In			
	Electronic	Long time delay	LTD	100, 110, 125, 140, 160, 175, 200, 225, 250			
		Short time delay	STD	(NON-2-3-4-5-6-7-8-9-10)×Ir			
		Instantaneous	INST	11×In			
		Pre-trip alarm	PTA	0.9×Ir			
		Pick-up LED		○			
Mounting	Direct mounting by screw			○			
	Plug-in	for Switchboard	Both line & load side	○ [2]			
			Line side only	○ [2]			
Terminal connection		Screw		○			
		Bus bar		○			
Durability (times)	Mechanical operation			25,000			
	Electrical operation			10,000			
Dimensions (mm) 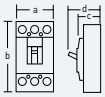		3/4P	a Width	105/140			
			b Height	165			
			c Depth	86.5			
			d	112			
Weight (kg, breaker only)		3/4P		2.0/2.4			

※ - The breaking capacity highlighted with blue and thick type is standard nominal value for each model in this catalogue.
1] DC is not applicable for electronic breaker. 2] Available for 3P breaker

▪ Accessories

• Signal

Auxiliary switch	1C, right-hand-side					
	AUX 12UP R1					
Trip alarm switch	1C, left-hand-side					
	ALT 12UP L1					
Shunt trip [1]	DC24V	DC100-110V	AC100-120V	AC200-230V	AC380-415V	AC440-480V
	SHT 12UP A	SHT 12UP C	SHT 12UP F	SHT 12UP H	SHT 12UP B	SHT 12UP D
Under voltage trip [2]	DC24V	DC100-110V	AC100-120V	AC200-230V	AC380-415V	AC440-480V
	*UVT 12UP J	*UVT 12UP L	*UVT 12UP N	*UVT 12UP P	*UVT 12UP Q	*UVT 12UP R

※ 1] The permissible operating voltage: 85-110% of rated voltage for AC , 75-125% for DC
2] The permissible operating voltage: 85-110% of rated voltage(AC), 85-125% of rated voltage(DC)
The tripping voltage: 20-70% of rated voltage(AC/DC)
Be sure not to use UVT for the electrical interlock system.
*Reset is possible without power.

• Operating

Operating handle [1]	**Power supply direction**		Upper	Right	Left
	Surface	**S type**	TFG 12UPS U4	TFG 12UPS R4	TFG 12UPS L4
		L type	TFG 12UPL U4	–	TFG 12UPL L4
	Extended	**S type**	TFH 12UPS		
		L type	TFH 12UPL		
Motor operator [2]			DC24V	AC/DC110V	AC/DC220V
			MOT 12UP DC24	MOT 12UP ADC110	MOT 12UP ADC220
Mechanical interlock			3 pole	4 pole	
			MIF 12UP 3	MIF 12UP 4	
Padlock plate [3]			PLD 12UP		

※ 1] For detail type information, please refer to page 195-202.
2] Motor operator is not recommended for marine application.
3] Padlock is not supplied.

• Mounting

Plug-in [1]	**Structure**		For both line & load side	For line side only
	Mounting base		TDM 12NEP	TDM 12NEF
	Connection block [2]	**6C contact**	CBM 26NE 6	–
		12C contact	CBM 26NE 6 [3]	–

※ 1] Available for 3P breaker
2] Connection blocks are required for internal accessory installation in both line & load side plug-in type 3P breaker.
3] 2EA shall be ordered for 12C contact.

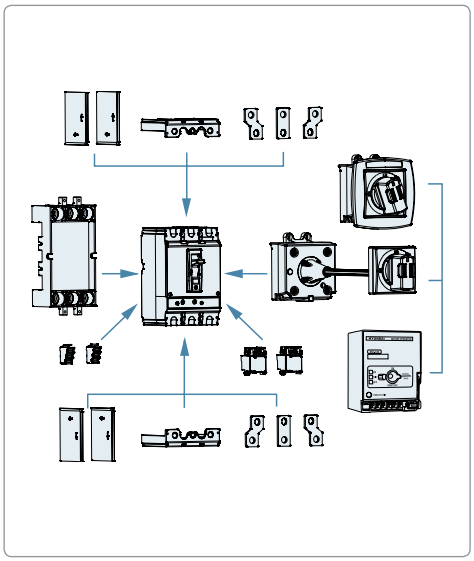

• Terminal

Terminal bus bar	**3 pole (6EA/SET)**	TBB 12NE 3
	4 pole (8EA/SET)	TBB 12NE 4
Cage terminal block	**3EA/SET**	CTB 12UP 3S
	4EA/SET	CTB 12UP 4S
Terminal cover [1]	**3 pole**	TCF 12UP 3
	4 pole	TCF 12UP 4
Interpole barrier [2]	**4EA/SET**	TQQ 12NE 3P

※ 1] For both line and load side of breaker, 2EA shall be ordered.
2] Supplied as standard component
Required quantity for both line and load side of breaker: 3 pole 4EA, 4 pole 6EA

Specifications and Standard Order Codes

▪ Standard order code and unit

• Electronic - LTD, STD, INST trip & PTA

Model / Breaking capacity at AC380/415V	Rated current	3 pole		4 pole		Specification	Category
		Code	Unit (EA)	Code	Unit (EA)		
UPB250S 85kA	250A	UPB250S 3PESS0000X 00250	8	UPB250S 4PESS0000X 00250	6	Screw type terminal connection, No option, 50Hz	MCCB /M3
UPB250H 100kA	250A	UPB250H 3PESS0000X 00250	8	UPB250H 4PESS0000X 00250	6		
UPB250L 130kA	250A	UPB250L 3PESS0000X 00250	8	UPB250L 4PESS0000X 00250	6		
UPB250X 150kA	250A	UPB250X 3PESS0000X 00250	8	UPB250X 4PESS0000X 00250	6		
UPB250S 85kA	250A	UPB250S 3PESS0000Y 00250	8	UPB250S 4PESS0000Y 00250	6	Screw type terminal connection, No option, 60Hz	
UPB250H 100kA	250A	UPB250H 3PESS0000Y 00250	8	UPB250H 4PESS0000Y 00250	6		
UPB250L 130kA	250A	UPB250L 3PESS0000Y 00250	8	UPB250L 4PESS0000Y 00250	6		
UPB250X 150kA	250A	UPB250X 3PESS0000Y 00250	8	UPB250X 4PESS0000Y 00250	6		

▪ Standard order code and unit

• Fixed thermal & fixed instantaneous / Thermal magnetic trip

40/45℃

Model / Breaking capacity at AC380/415V	Rated current	3 pole		4 pole		Specification	Category
		Code	Unit (EA)	Code	Unit (EA)		
UPB250S 85kA	125A	UPB250S 3PT4S0000C 00125	8	UPB250S 4PT4S0000C 00125	6	Screw type terminal connection, No option, 50/60Hz	MCCB /M2
	150A	UPB250S 3PT4S0000C 00150	8	UPB250S 4PT4S0000C 00150	6		
	160A	UPB250S 3PT4S0000C 00160	8	UPB250S 4PT4S0000C 00160	6		
	175A	UPB250S 3PT4S0000C 00175	8	UPB250S 4PT4S0000C 00175	6		
	200A	UPB250S 3PT4S0000C 00200	8	UPB250S 4PT4S0000C 00200	6		
	225A	UPB250S 3PT4S0000C 00225	8	UPB250S 4PT4S0000C 00225	6		
	250A	UPB250S 3PT4S0000C 00250	8	UPB250S 4PT4S0000C 00250	6		
UPB250H 100kA	125A	UPB250H 3PT4S0000C 00125	8	UPB250H 4PT4S0000C 00125	6		
	150A	UPB250H 3PT4S0000C 00150	8	UPB250H 4PT4S0000C 00150	6		
	160A	UPB250H 3PT4S0000C 00160	8	UPB250H 4PT4S0000C 00160	6		
	175A	UPB250H 3PT4S0000C 00175	8	UPB250H 4PT4S0000C 00175	6		
	200A	UPB250H 3PT4S0000C 00200	8	UPB250H 4PT4S0000C 00200	6		
	225A	UPB250H 3PT4S0000C 00225	8	UPB250H 4PT4S0000C 00225	6		
	250A	UPB250H 3PT4S0000C 00250	8	UPB250H 4PT4S0000C 00250	6		
UPB250L 130kA	125A	UPB250L 3PT4S0000C 00125	8	UPB250L 4PT4S0000C 00125	6		
	150A	UPB250L 3PT4S0000C 00150	8	UPB250L 4PT4S0000C 00150	6		
	160A	UPB250L 3PT4S0000C 00160	8	UPB250L 4PT4S0000C 00160	6		
	175A	UPB250L 3PT4S0000C 00175	8	UPB250L 4PT4S0000C 00175	6		
	200A	UPB250L 3PT4S0000C 00200	8	UPB250L 4PT4S0000C 00200	6		
	225A	UPB250L 3PT4S0000C 00225	8	UPB250L 4PT4S0000C 00225	6		
	250A	UPB250L 3PT4S0000C 00250	8	UPB250L 4PT4S0000C 00250	6		
UPB250X 150kA	125A	UPB250X 3PT4S0000C 00125	8	UPB250X 4PT4S0000C 00125	6		
	150A	UPB250X 3PT4S0000C 00150	8	UPB250X 4PT4S0000C 00150	6		
	160A	UPB250X 3PT4S0000C 00160	8	UPB250X 4PT4S0000C 00160	6		
	175A	UPB250X 3PT4S0000C 00175	8	UPB250X 4PT4S0000C 00175	6		
	200A	UPB250X 3PT4S0000C 00200	8	UPB250X 4PT4S0000C 00200	6		
	225A	UPB250X 3PT4S0000C 00225	8	UPB250X 4PT4S0000C 00225	6		
	250A	UPB250X 3PT4S0000C 00250	8	UPB250X 4PT4S0000C 00250	6		

50℃

Model / Breaking capacity at AC380/415V	Rated current	3 pole		4 pole		Specification	Category
		Code	Unit (EA)	Code	Unit (EA)		
UPB250S 85kA	125A	UPB250S 3PT5S0000C 00125	8	UPB250S 4PT5S0000C 00125	6	Screw type terminal connection, No option, 50/60Hz	MCCB /M2
	150A	UPB250S 3PT5S0000C 00150	8	UPB250S 4PT5S0000C 00150	6		
	160A	UPB250S 3PT5S0000C 00160	8	UPB250S 4PT5S0000C 00160	6		
	175A	UPB250S 3PT5S0000C 00175	8	UPB250S 4PT5S0000C 00175	6		
	200A	UPB250S 3PT5S0000C 00200	8	UPB250S 4PT5S0000C 00200	6		
	225A	UPB250S 3PT5S0000C 00225	8	UPB250S 4PT5S0000C 00225	6		
	250A	UPB250S 3PT5S0000C 00250	8	UPB250S 4PT5S0000C 00250	6		
UPB250H 100kA	125A	UPB250H 3PT5S0000C 00125	8	UPB250H 4PT5S0000C 00125	6		
	150A	UPB250H 3PT5S0000C 00150	8	UPB250H 4PT5S0000C 00150	6		
	160A	UPB250H 3PT5S0000C 00160	8	UPB250H 4PT5S0000C 00160	6		
	175A	UPB250H 3PT5S0000C 00175	8	UPB250H 4PT5S0000C 00175	6		
	200A	UPB250H 3PT5S0000C 00200	8	UPB250H 4PT5S0000C 00200	6		
	225A	UPB250H 3PT5S0000C 00225	8	UPB250H 4PT5S0000C 00225	6		
	250A	UPB250H 3PT5S0000C 00250	8	UPB250H 4PT5S0000C 00250	6		
UPB250L 130kA	125A	UPB250L 3PT5S0000C 00125	8	UPB250L 4PT5S0000C 00125	6		
	150A	UPB250L 3PT5S0000C 00150	8	UPB250L 4PT5S0000C 00150	6		
	160A	UPB250L 3PT5S0000C 00160	8	UPB250L 4PT5S0000C 00160	6		
	175A	UPB250L 3PT5S0000C 00175	8	UPB250L 4PT5S0000C 00175	6		
	200A	UPB250L 3PT5S0000C 00200	8	UPB250L 4PT5S0000C 00200	6		
	225A	UPB250L 3PT5S0000C 00225	8	UPB250L 4PT5S0000C 00225	6		
	250A	UPB250L 3PT5S0000C 00250	8	UPB250L 4PT5S0000C 00250	6		
UPB250X 150kA	125A	UPB250X 3PT5S0000C 00125	8	UPB250X 4PT5S0000C 00125	6		
	150A	UPB250X 3PT5S0000C 00150	8	UPB250X 4PT5S0000C 00150	6		
	160A	UPB250X 3PT5S0000C 00160	8	UPB250X 4PT5S0000C 00160	6		
	175A	UPB250X 3PT5S0000C 00175	8	UPB250X 4PT5S0000C 00175	6		
	200A	UPB250X 3PT5S0000C 00200	8	UPB250X 4PT5S0000C 00200	6		
	225A	UPB250X 3PT5S0000C 00225	8	UPB250X 4PT5S0000C 00225	6		
	250A	UPB250X 3PT5S0000C 00250	8	UPB250X 4PT5S0000C 00250	6		

Specifications and Standard Order Codes

▪ Standard order code and unit

• Adjustable thermal & fixed instantaneous / Thermal magnetic trip

40/45℃

Model / Breaking capacity at AC380/415V	Rated current	3 pole		4 pole		Specification	Category
		Code	Unit (EA)	Code	Unit (EA)		
UPB250S 85kA	125A	UPB250S 3PT4S0000C 00125F	8	UPB250S 4PT4S0000C 00125F	6	Screw type terminal connection, No option, 50/60Hz	MCCB /M2
	150A	UPB250S 3PT4S0000C 00150F	8	UPB250S 4PT4S0000C 00150F	6		
	160A	UPB250S 3PT4S0000C 00160F	8	UPB250S 4PT4S0000C 00160F	6		
	175A	UPB250S 3PT4S0000C 00175F	8	UPB250S 4PT4S0000C 00175F	6		
	200A	UPB250S 3PT4S0000C 00200F	8	UPB250S 4PT4S0000C 00200F	6		
	225A	UPB250S 3PT4S0000C 00225F	8	UPB250S 4PT4S0000C 00225F	6		
	250A	UPB250S 3PT4S0000C 00250F	8	UPB250S 4PT4S0000C 00250F	6		
UPB250H 100kA	125A	UPB250H 3PT4S0000C 00125F	8	UPB250H 4PT4S0000C 00125F	6		
	150A	UPB250H 3PT4S0000C 00150F	8	UPB250H 4PT4S0000C 00150F	6		
	160A	UPB250H 3PT4S0000C 00160F	8	UPB250H 4PT4S0000C 00160F	6		
	175A	UPB250H 3PT4S0000C 00175F	8	UPB250H 4PT4S0000C 00175F	6		
	200A	UPB250H 3PT4S0000C 00200F	8	UPB250H 4PT4S0000C 00200F	6		
	225A	UPB250H 3PT4S0000C 00225F	8	UPB250H 4PT4S0000C 00225F	6		
	250A	UPB250H 3PT4S0000C 00250F	8	UPB250F 4PT4S0000C 00250F	6		
UPB250L 130kA	125A	UPB250L 3PT4S0000C 00125F	8	UPB250L 4PT4S0000C 00125F	6		
	150A	UPB250L 3PT4S0000C 00150F	8	UPB250L 4PT4S0000C 00150F	6		
	160A	UPB250L 3PT4S0000C 00160F	8	UPB250L 4PT4S0000C 00160F	6		
	175A	UPB250L 3PT4S0000C 00175F	8	UPB250L 4PT4S0000C 00175F	6		
	200A	UPB250L 3PT4S0000C 00200F	8	UPB250L 4PT4S0000C 00200F	6		
	225A	UPB250L 3PT4S0000C 00225F	8	UPB250L 4PT4S0000C 00225F	6		
	250A	UPB250L 3PT4S0000C 00250F	8	UPB250L 4PT4S0000C 00250F	6		
UPB250X 150kA	125A	UPB250X 3PT4S0000C 00125F	8	UPB250X 4PT4S0000C 00125F	6		
	150A	UPB250X 3PT4S0000C 00150F	8	UPB250X 4PT4S0000C 00150F	6		
	160A	UPB250X 3PT4S0000C 00160F	8	UPB250X 4PT4S0000C 00160F	6		
	175A	UPB250X 3PT4S0000C 00175F	8	UPB250X 4PT4S0000C 00175F	6		
	200A	UPB250X 3PT4S0000C 00200F	8	UPB250X 4PT4S0000C 00200F	6		
	225A	UPB250X 3PT4S0000C 00225F	8	UPB250X 4PT4S0000C 00225F	6		
	250A	UPB250X 3PT4S0000C 00250F	8	UPB250X 4PT4S0000C 00250F	6		

50℃

Model / Breaking capacity at AC380/415V	Rated current	3 pole		4 pole		Specification	Category
		Code	Unit (EA)	Code	Unit (EA)		
UPB250S 85kA	125A	UPB250S 3PT5S0000C 00125F	8	UPB250S 4PT5S0000C 00125F	6	Screw type terminal connection, No option, 50/60Hz	MCCB /M2
	150A	UPB250S 3PT5S0000C 00150F	8	UPB250S 4PT5S0000C 00150F	6		
	160A	UPB250S 3PT5S0000C 00160F	8	UPB250S 4PT5S0000C 00160F	6		
	175A	UPB250S 3PT5S0000C 00175F	8	UPB250S 4PT5S0000C 00175F	6		
	200A	UPB250S 3PT5S0000C 00200F	8	UPB250S 4PT5S0000C 00200F	6		
	225A	UPB250S 3PT5S0000C 00225F	8	UPB250S 4PT5S0000C 00225F	6		
	250A	UPB250S 3PT5S0000C 00250F	8	UPB250S 4PT5S0000C 00250F	6		
UPB250H 100kA	125A	UPB250H 3PT5S0000C 00125F	8	UPB250H 4PT5S0000C 00125F	6		
	150A	UPB250H 3PT5S0000C 00150F	8	UPB250H 4PT5S0000C 00150F	6		
	160A	UPB250H 3PT5S0000C 00160F	8	UPB250H 4PT5S0000C 00160F	6		
	175A	UPB250H 3PT5S0000C 00175F	8	UPB250H 4PT5S0000C 00175F	6		
	200A	UPB250H 3PT5S0000C 00200F	8	UPB250H 4PT5S0000C 00200F	6		
	225A	UPB250H 3PT5S0000C 00225F	8	UPB250H 4PT5S0000C 00225F	6		
	250A	UPB250H 3PT5S0000C 00250F	8	UPB250F 4PT5S0000C 00250F	6		
UPB250L 130kA	125A	UPB250L 3PT5S0000C 00125F	8	UPB250L 4PT5S0000C 00125F	6		
	150A	UPB250L 3PT5S0000C 00150F	8	UPB250L 4PT5S0000C 00150F	6		
	160A	UPB250L 3PT5S0000C 00160F	8	UPB250L 4PT5S0000C 00160F	6		
	175A	UPB250L 3PT5S0000C 00175F	8	UPB250L 4PT5S0000C 00175F	6		
	200A	UPB250L 3PT5S0000C 00200F	8	UPB250L 4PT5S0000C 00200F	6		
	225A	UPB250L 3PT5S0000C 00225F	8	UPB250L 4PT5S0000C 00225F	6		
	250A	UPB250L 3PT5S0000C 00250F	8	UPB250L 4PT5S0000C 00250F	6		
UPB250X 150kA	125A	UPB250X 3PT5S0000C 00125F	8	UPB250X 4PT5S0000C 00125F	6		
	150A	UPB250X 3PT5S0000C 00150F	8	UPB250X 4PT5S0000C 00150F	6		
	160A	UPB250X 3PT5S0000C 00160F	8	UPB250X 4PT5S0000C 00160F	6		
	175A	UPB250X 3PT5S0000C 00175F	8	UPB250X 4PT5S0000C 00175F	6		
	200A	UPB250X 3PT5S0000C 00200F	8	UPB250X 4PT5S0000C 00200F	6		
	225A	UPB250X 3PT5S0000C 00225F	8	UPB250X 4PT5S0000C 00225F	6		
	250A	UPB250X 3PT5S0000C 00250F	8	UPB250X 4PT5S0000C 00250F	6		

▪ Standard order code and unit

• Adjustable thermal & adjustable instantaneous / Thermal magnetic trip

40/45℃

Model / Breaking capacity at AC380/415V	Rated current	3 pole		4 pole		Specification	Category
		Code	Unit (EA)	Code	Unit (EA)		
UPB250S 85kA	125A	UPB250S 3PT4S0000C 00125H	8	UPB250S 4PT4S0000C 00125H	6	Screw type terminal connection, No option, 50/60Hz	MCCB /M2
	150A	UPB250S 3PT4S0000C 00150H	8	UPB250S 4PT4S0000C 00150H	6		
	160A	UPB250S 3PT4S0000C 00160H	8	UPB250S 4PT4S0000C 00160H	6		
	175A	UPB250S 3PT4S0000C 00175H	8	UPB250S 4PT4S0000C 00175H	6		
	200A	UPB250S 3PT4S0000C 00200H	8	UPB250S 4PT4S0000C 00200H	6		
	225A	UPB250S 3PT4S0000C 00225H	8	UPB250S 4PT4S0000C 00225H	6		
	250A	UPB250S 3PT4S0000C 00250H	8	UPB250S 4PT4S0000C 00250H	6		
UPB250H 100kA	125A	UPB250H 3PT4S0000C 00125H	8	UPB250H 4PT4S0000C 00125H	6		
	150A	UPB250H 3PT4S0000C 00150H	8	UPB250H 4PT4S0000C 00150H	6		
	160A	UPB250H 3PT4S0000C 00160H	8	UPB250H 4PT4S0000C 00160H	6		
	175A	UPB250H 3PT4S0000C 00175H	8	UPB250H 4PT4S0000C 00175H	6		
	200A	UPB250H 3PT4S0000C 00200H	8	UPB250H 4PT4S0000C 00200H	6		
	225A	UPB250H 3PT4S0000C 00225H	8	UPB250H 4PT4S0000C 00225H	6		
	250A	UPB250H 3PT4S0000C 00250H	8	UPB250H 4PT4S0000C 00250H	6		
UPB250L 130kA	125A	UPB250L 3PT4S0000C 00125H	8	UPB250L 4PT4S0000C 00125H	6		
	150A	UPB250L 3PT4S0000C 00150H	8	UPB250L 4PT4S0000C 00150H	6		
	160A	UPB250L 3PT4S0000C 00160H	8	UPB250L 4PT4S0000C 00160H	6		
	175A	UPB250L 3PT4S0000C 00175H	8	UPB250L 4PT4S0000C 00175H	6		
	200A	UPB250L 3PT4S0000C 00200H	8	UPB250L 4PT4S0000C 00200H	6		
	225A	UPB250L 3PT4S0000C 00225H	8	UPB250L 4PT4S0000C 00225H	6		
	250A	UPB250L 3PT4S0000C 00250H	8	UPB250L 4PT4S0000C 00250H	6		
UPB250X 150kA	125A	UPB250X 3PT4S0000C 00125H	8	UPB250X 4PT4S0000C 00125H	6		
	150A	UPB250X 3PT4S0000C 00150H	8	UPB250X 4PT4S0000C 00150H	6		
	160A	UPB250X 3PT4S0000C 00160H	8	UPB250X 4PT4S0000C 00160H	6		
	175A	UPB250X 3PT4S0000C 00175H	8	UPB250X 4PT4S0000C 00175H	6		
	200A	UPB250X 3PT4S0000C 00200H	8	UPB250X 4PT4S0000C 00200H	6		
	225A	UPB250X 3PT4S0000C 00225H	8	UPB250X 4PT4S0000C 00225H	6		
	250A	UPB250X 3PT4S0000C 00250H	8	UPB250X 4PT4S0000C 00250H	6		

50℃

Model / Breaking capacity at AC380/415V	Rated current	3 pole		4 pole		Specification	Category
		Code	Unit (EA)	Code	Unit (EA)		
UPB250S 85kA	125A	UPB250S 3PT5S0000C 00125H	8	UPB250S 4PT5S0000C 00125H	6	Screw type terminal connection, No option, 50/60Hz	MCCB /M2
	150A	UPB250S 3PT5S0000C 00150H	8	UPB250S 4PT5S0000C 00150H	6		
	160A	UPB250S 3PT5S0000C 00160H	8	UPB250S 4PT5S0000C 00160H	6		
	175A	UPB250S 3PT5S0000C 00175H	8	UPB250S 4PT5S0000C 00175H	6		
	200A	UPB250S 3PT5S0000C 00200H	8	UPB250S 4PT5S0000C 00200H	6		
	225A	UPB250S 3PT5S0000C 00225H	8	UPB250S 4PT5S0000C 00225H	6		
	250A	UPB250S 3PT5S0000C 00250H	8	UPB250S 4PT5S0000C 00250H	6		
UPB250H 100kA	125A	UPB250H 3PT5S0000C 00125H	8	UPB250H 4PT5S0000C 00125H	6		
	150A	UPB250H 3PT5S0000C 00150H	8	UPB250H 4PT5S0000C 00150H	6		
	160A	UPB250H 3PT5S0000C 00160H	8	UPB250H 4PT5S0000C 00160H	6		
	175A	UPB250H 3PT5S0000C 00175H	8	UPB250H 4PT5S0000C 00175H	6		
	200A	UPB250H 3PT5S0000C 00200H	8	UPB250H 4PT5S0000C 00200H	6		
	225A	UPB250H 3PT5S0000C 00225H	8	UPB250H 4PT5S0000C 00225H	6		
	250A	UPB250H 3PT5S0000C 00250H	8	UPB250H 4PT5S0000C 00250H	6		
UPB250L 130kA	125A	UPB250L 3PT5S0000C 00125H	8	UPB250L 4PT5S0000C 00125H	6		
	150A	UPB250L 3PT5S0000C 00150H	8	UPB250L 4PT5S0000C 00150H	6		
	160A	UPB250L 3PT5S0000C 00160H	8	UPB250L 4PT5S0000C 00160H	6		
	175A	UPB250L 3PT5S0000C 00175H	8	UPB250L 4PT5S0000C 00175H	6		
	200A	UPB250L 3PT5S0000C 00200H	8	UPB250L 4PT5S0000C 00200H	6		
	225A	UPB250L 3PT5S0000C 00225H	8	UPB250L 4PT5S0000C 00225H	6		
	250A	UPB250L 3PT5S0000C 00250H	8	UPB250L 4PT5S0000C 00250H	6		
UPB250X 150kA	125A	UPB250X 3PT5S0000C 00125H	8	UPB250X 4PT5S0000C 00125H	6		
	150A	UPB250X 3PT5S0000C 00150H	8	UPB250X 4PT5S0000C 00150H	6		
	160A	UPB250X 3PT5S0000C 00160H	8	UPB250X 4PT5S0000C 00160H	6		
	175A	UPB250X 3PT5S0000C 00175H	8	UPB250X 4PT5S0000C 00175H	6		
	200A	UPB250X 3PT5S0000C 00200H	8	UPB250X 4PT5S0000C 00200H	6		
	225A	UPB250X 3PT5S0000C 00225H	8	UPB250X 4PT5S0000C 00225H	6		
	250A	UPB250X 3PT5S0000C 00250H	8	UPB250X 4PT5S0000C 00250H	6		

Specifications and Standard Order Codes

| UPB type / 400AF |

- UPB400S 85kA
- UPB400H 100kA
- UPB400L 130kA
- UPB400X 150kA

					UPB400S	UPB400H	UPB400L	UPB400X
								
Number of poles (P)					3, 4			
Degree of protection (with terminal cover)					IP20			
Utilization category					A			
Suitability of isolation					○			
Protection					overload, inst., short-circuit			
Rating	Rated current (A)				200-400			
	Rated insulation voltage [Ui] (V)				AC750			
	Rated operational voltage [Ue] (V)				AC690			
	Rated impulse withstand voltage [Uimp] (kV)				8			
Rated short-circuit breaking capacity IEC 60947-2 K 60947-2	Ultimate [Icu] (kA r.m.s.)	AC660/690V, 50-60Hz			10	10	25	25
		AC480/500V, 50-60Hz			50	65	85	85
		AC440/460V, 50-60Hz			65	85	100	150
		AC380/415V, 50-60Hz			85	100	130	150
		AC220/240V, 50-60Hz			100	130	150	200
	Service [Ics]	% of [Icu]			100			
Trip mechanism & Protection characteristics	Electronic	Long time delay		LTD	(0.5-1)[1] ×In (15 setting)			
		Short time delay		STD	(2-4-6-8-10)×Ir			
		Instantaneous		INST	(3-6-8-10-11)×In			
		Ground fault trip		GFT	(0.2-0.3-0.4)×In			
		Pre-trip alarm		PTA	0.9×Ir			
		I^2T lamp			○			
		Pick-up LED			○			
Mounting	Direct mounting by screw				○			
	Plug-in	for Switchboard	Both line & load side		○[2]			
			Line side only		○[2]			
Terminal connection		Screw			○			
		Bus bar			○			
Durability (times)	Mechanical operation				20,000			
	Electrical operation				6,000			
Dimensions (mm)	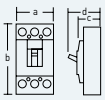	3/4P	a	Width	140/185			
			b	Height	255			
			c	Depth	117			
			d		159.5			
Weight (kg, breaker only)		3/4P			6.0/7.8			

※ - The breaking capacity highlighted with blue and thick type is standard nominal value for each model in this catalogue.
1] (0.5-1): (0.63-0.8-1)x(0.8-0.85-0.9-0.95-1)
2] Available for 3P breaker

▪ Accessories

• Signal

Auxiliary switch	1C, left-hand-side					
	AUX 46UP L1					
Trip alarm switch	1C, right-hand-side					
	ALT 46UP R1					
Shunt trip[1]	DC24V	DC100-110V	AC100-120V	AC200-230V	AC380-415V	AC440-480V
	SHT 46UP A	SHT 46UP C	SHT 46UP F	SHT 46UP H	SHT 46UP B	SHT 46UP D
Under voltage trip[2]	DC24V	DC100-110V	AC100-120V	AC200-230V	AC380-415V	AC440-480V
	*UVT 46UP J	*UVT 46UP L	*UVT 46UP N	*UVT 46UP P	*UVT 46UP Q	*UVT 46UP R

※ 1] The permissible operating voltage: 85-110% of rated voltage for AC , 75-125% for DC
2] The permissible operating voltage: 85-110% of rated voltage(AC), 85-125% of rated voltage(DC)
The tripping voltage: 20-70% of rated voltage(AC/DC)
Be sure not to use UVT for the electrical interlock system.
*Reset is possible without power.

• Operating

Operating handle[1]	Power supply direction		Upper	Right	Left
	Surface	S type	TFG 46UPS U4	TFG 46UPS R4	TFG 46UPS L4
	Extended	S type	TFH 46UPS		
Motor operator[2]			DC24V	AC/DC110V	AC/DC220V
			MOT 46NE DC24	MOT 46NE ADC110	MOT 46NE ADC220
Mechanical interlock			3 pole	4 pole	
			MIF 46UP 3	MIF 46UP 4	
Padlock plate[3]			PLD 12UP		
Extension handle[4]			THA 46UP		

※ 1] For detail type information, please refer to page 195-202.
2] Motor operator is not recommended for marine application.
3] Padlock is not supplied.
4] Supplied as standard component

• Mounting

Plug-in[1]	Structure		For both line & load side	For line side only
	Mounting base		TDM 46NEP[3]	TDM 46NEF
	Connection block[2]	6C contact	CBM 26NE 6	–
		12C contact	CBM 26NE 6[4]	–

※ 1] Available for 3P breaker
2] Connection blocks are required for internal accessory installation in both line & load side plug-in type 3P breaker.
3] 2EA are required for both line & load side plug-in type 3P breaker.
4] 2EA shall be ordered for 12C contact.

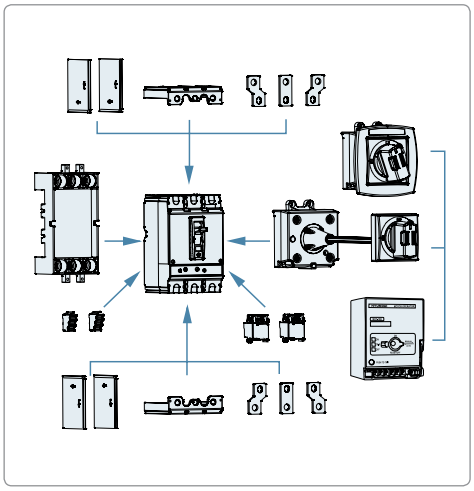

• Terminal

Terminal bus bar	3 pole (6EA/SET)	TBB 40NE 3
	4 pole (8EA/SET)	TBB 40NE 4
Cage terminal block	3EA/SET	CTB 46UP 3S
	4EA/SET	CTB 46UP 4S
Terminal cover[1]	3 pole	TCF 46UP 3
	4 pole	TCF 46UP 4
Interpole barrier[2]	4EA/SET	TQQ 46NE 3P

※ 1] For both line and load side of breaker, 2EA shall be ordered.
2] Supplied as standard component
Required quantity for both line and load side of breaker: 3 pole 4EA, 4 pole 6EA

▪ Standard order code and unit

• Electronic - LTD, STD, INST trip & PTA

Model / Breaking capacity at AC380/415V	Rated current	3 pole		4 pole		Specification	Category
		Code	Unit (EA)	Code	Unit (EA)		
UPB400S 85kA	400A	UPB400S 3PESS0000X 00400	3	UPB400S 4PESS0000X 00400	2	Screw type terminal connection, No option, 50Hz	MCCB/M3
UPB400H 100kA	400A	UPB400H 3PESS0000X 00400	3	UPB400H 4PESS0000X 00400	2		
UPB400L 130kA	400A	UPB400L 3PESS0000X 00400	3	UPB400L 4PESS0000X 00400	2		
UPB400X 150kA	400A	UPB400X 3PESS0000X 00400	3	UPB400X 4PESS0000X 00400	2		
UPB400S 85kA	400A	UPB400S 3PESS0000Y 00400	3	UPB400S 4PESS0000Y 00400	2	Screw type terminal connection, No option, 60Hz	
UPB400H 100kA	400A	UPB400H 3PESS0000Y 00400	3	UPB400H 4PESS0000Y 00400	2		
UPB400L 130kA	400A	UPB400L 3PESS0000Y 00400	3	UPB400L 4PESS0000Y 00400	2		
UPB400X 150kA	400A	UPB400X 3PESS0000Y 00400	3	UPB400X 4PESS0000Y 00400	2		

• Electronic - LTD, STD, INST, GFT trip & PTA

Model / Breaking capacity at AC380/415V	Rated current	3 pole		4 pole		Specification	Category
		Code	Unit (EA)	Code	Unit (EA)		
UPB400S 85kA	400A	UPB400S 3PEGS0000X 00400	3	UPB400S 4PEGS0000X 00400	2	Screw type terminal connection, No option, 50Hz	MCCB/M3
UPB400H 100kA	400A	UPB400H 3PEGS0000X 00400	3	UPB400H 4PEGS0000X 00400	2		
UPB400L 130kA	400A	UPB400L 3PEGS0000X 00400	3	UPB400L 4PEGS0000X 00400	2		
UPB400X 150kA	400A	UPB400X 3PEGS0000X 00400	3	UPB400X 4PEGS0000X 00400	2		
UPB400S 85kA	400A	UPB400S 3PEGS0000Y 00400	3	UPB400S 4PEGS0000Y 00400	2	Screw type terminal connection, No option, 60Hz	
UPB400H 100kA	400A	UPB400H 3PEGS0000Y 00400	3	UPB400H 4PEGS0000Y 00400	2		
UPB400L 130kA	400A	UPB400L 3PEGS0000Y 00400	3	UPB400L 4PEGS0000Y 00400	2		
UPB400X 150kA	400A	UPB400X 3PEGS0000Y 00400	3	UPB400X 4PEGS0000Y 00400	2		

Specifications and Standard Order Codes

| UPB type / 630AF |

- UPB630S 85kA
- UPB630H 100kA
- UPB630L 130kA
- UPB630X 150kA

					UPB630S	UPB630H	UPB630L	UPB630X
								
Number of poles (P)					3, 4			
Degree of protection (with terminal cover)					IP20			
Utilization category					A			
Suitability of isolation					○			
Protection					overload, inst., short-circuit			
Rating	Rated current (A)				320-630			
	Rated insulation voltage [Ui] (V)				AC750			
	Rated operational voltage [Ue] (V)				AC690			
	Rated impulse withstand voltage [Uimp] (kV)				8			
Rated short-circuit breaking capacity IEC 60947-2 K 60947-2	Ultimate [Icu] (kA r.m.s.)	AC660/690V, 50-60Hz			10	10	25	25
		AC480/500V, 50-60Hz			50	65	85	85
		AC440/460V, 50-60Hz			65	85	100	150
		AC380/415V, 50-60Hz			85	100	130	150
		AC220/240V, 50-60Hz			100	130	150	200
	Service [Ics]	% of [Icu]			100			
Trip mechanism & Protection characteristics	Electronic	Long time delay		LTD	(0.5-1)[1] ×In (15 setting)			
		Short time delay		STD	(2-4-6-8-10)×Ir			
		Instantaneous		INST	(3-6-8-10-11)×In			
		Ground fault trip		GFT	(0.2-0.3-0.4)×In			
		Pre-trip alarm		PTA	0.9×Ir			
		I^2T lamp			○			
		Pick-up LED			○			
Mounting	Direct mounting by screw				○			
	Plug-in	for Switchboard	Both line & load side		○[2]			
			Line side only		○[2]			
Terminal connection		Screw			○			
		Bus bar			○			
Durability (times)	Mechanical operation				20,000			
	Electrical operation				6,000			
Dimensions (mm)	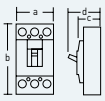	3/4P	a	Width	140/185			
			b	Height	255			
			c	Depth	117			
			d		159.5			
Weight (kg, breaker only)		3/4P			6.0/7.8			

※ - The breaking capacity highlighted with blue and thick type is standard nominal value for each model in this catalogue.
1] (0.5-1): (0.63-0.8-1)x(0.8-0.85-0.9-0.95-1)
2] Available for 3P breaker

▪ Accessories

• Signal

Auxiliary switch	1C, left-hand-side				
	AUX 46UP L1				
Trip alarm switch	1C, right-hand-side				
	ALT 46UP R1				
Shunt trip[1]	DC24V	DC100-110V	AC100-120V	AC200-230V	AC380-415V	AC440-480V
	SHT 46UP A	SHT 46UP C	SHT 46UP F	SHT 46UP H	SHT 46UP B	SHT 46UP D
Under voltage trip[2]	DC24V	DC100-110V	AC100-120V	AC200-230V	AC380-415V	AC440-480V
	*UVT 46UP J	*UVT 46UP L	*UVT 46UP N	*UVT 46UP P	*UVT 46UP Q	*UVT 46UP R

※ 1] The permissible operating voltage: 85-110% of rated voltage for AC , 75-125% for DC
2] The permissible operating voltage: 85-110% of rated voltage(AC), 85-125% of rated voltage(DC)
The tripping voltage: 20-70% of rated voltage(AC/DC)
Be sure not to use UVT for the electrical interlock system.
*Reset is possible without power.

• Operating

Operating handle[1]	Power supply direction		Upper	Right	Left
	Surface	S type	TFG 46UPS U4	TFG 46UPS R4	TFG 46UPS L4
	Extended	S type	TFH 46UPS		
Motor operator[2]			DC24V	AC/DC110V	AC/DC220V
			MOT 46NE DC24	MOT 46NE ADC110	MOT 46NE ADC220
Mechanical interlock			3 pole	4 pole	
			MIF 46UP 3	MIF 46UP 4	
Padlock plate[3]			PLD 12UP		
Extension handle[4]			THA 46UP		

※ 1] For detail type information, please refer to page no. 195-202.
2] Motor operator is not recommended for marine application.
3] Padlock is not supplied.
4] Supplied as standard component

• Mounting

Plug-in[1]	Structure		For both line & load side	For line side only
	Mounting base		TDM 46NEP[3]	TDM 46NEF
	Connection block[2]	6C contact	CBM 26NE 6	–
		12C contact	CBM 26NE 6[4]	–

※ 1] Available for 3P breaker
2] Connection blocks are required for internal accessory installation in both line & load side plug-in type 3P breaker.
3] 2EA are required for both line & load side plug-in type 3P breaker.
4] 2EA shall be ordered for 12C contact.

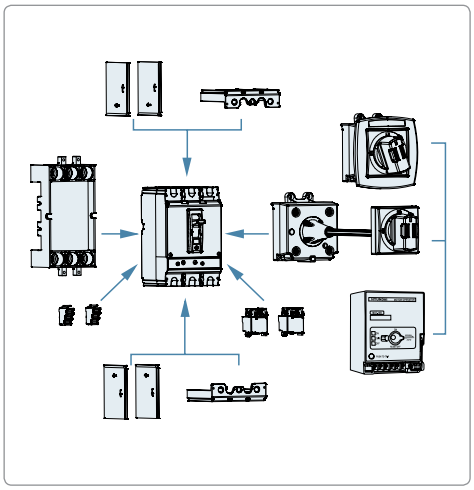

• Terminal

Terminal bus bar	3 pole (6EA/SET)	TBB 60NE 3
	4 pole (8EA/SET)	TBB 60NE 4
Cage terminal block	3EA/SET	CTB 46UP 3S
	4EA/SET	CTB 46UP 4S
Terminal cover[1]	3 pole	TCF 46UP 3
	4 pole	TCF 46UP 4
Interpole barrier[2]	4EA/SET	TQQ 46NE 3P

※ 1] For both line and load side of breaker, 2EA shall be ordered.
2] Supplied as standard component
Required quantity for both line and load side of breaker: 3 pole 4EA, 4 pole 6EA

▪ Standard order code and unit

• Electronic - LTD, STD, INST trip & PTA

Model / Breaking capacity at AC380/415V	Rated current	3 pole		4 pole		Specification	Category
		Code	Unit (EA)	Code	Unit (EA)		
UPB630S 85kA	630A	UPB630S 3PESS0000X 00630	3	UPB630S 4PESS0000X 00630	2	Screw type terminal connection, No option, 50Hz	MCCB/M3
UPB630H 100kA	630A	UPB630H 3PESS0000X 00630	3	UPB630H 4PESS0000X 00630	2		
UPB630L 130kA	630A	UPB630L 3PESS0000X 00630	3	UPB630L 4PESS0000X 00630	2		
UPB630X 150kA	630A	UPB630X 3PESS0000X 00630	3	UPB630X 4PESS0000X 00630	2		
UPB630S 85kA	630A	UPB630S 3PESS0000Y 00630	3	UPB630S 4PESS0000Y 00630	2	Screw type terminal connection, No option, 60Hz	
UPB630H 100kA	630A	UPB630H 3PESS0000Y 00630	3	UPB630H 4PESS0000Y 00630	2		
UPB630L 130kA	630A	UPB630L 3PESS0000Y 00630	3	UPB630L 4PESS0000Y 00630	2		
UPB630X 150kA	630A	UPB630X 3PESS0000Y 00630	3	UPB630X 4PESS0000Y 00630	2		

• Electronic - LTD, STD, INST, GFT trip & PTA

Model / Breaking capacity at AC380/415V	Rated current	3 pole		4 pole		Specification	Category
		Code	Unit (EA)	Code	Unit (EA)		
UPB630S 85kA	630A	UPB630S 3PEGS0000X 00630	3	UPB630S 4PEGS0000X 00630	2	Screw type terminal connection, No option, 50Hz	MCCB/M3
UPB630H 100kA	630A	UPB630H 3PEGS0000X 00630	3	UPB630H 4PEGS0000X 00630	2		
UPB630L 130kA	630A	UPB630L 3PEGS0000X 00630	3	UPB630L 4PEGS0000X 00630	2		
UPB630X 150kA	630A	UPB630X 3PEGS0000X 00630	3	UPB630X 4PEGS0000X 00630	2		
UPB630S 85kA	630A	UPB630S 3PEGS0000Y 00630	3	UPB630S 4PEGS0000Y 00630	2	Screw type terminal connection, No option, 60Hz	
UPB630H 100kA	630A	UPB630H 3PEGS0000Y 00630	3	UPB630H 4PEGS0000Y 00630	2		
UPB630L 130kA	630A	UPB630L 3PEGS0000Y 00630	3	UPB630L 4PEGS0000Y 00630	2		
UPB630X 150kA	630A	UPB630X 3PEGS0000Y 00630	3	UPB630X 4PEGS0000Y 00630	2		

Specifications and Standard Order Codes

| Motor protection / UPB type 125AF |

- UPB100H 100kA
- UPB100L 130kA

				UPB100H	UPB100L
					
Number of poles (P)				3	
Degree of protection (with terminal cover)				IP20	
Utilization category				A	
Suitability of isolation				○	
Protection				instantaneous, short-circuit	
Rating	Rated current (A)			2.5,3.2,6.3,12.5,20,32,50,63,80,100	
	Rated insulation voltage [Ui] (V)			AC750	
	Rated operational voltage [Ue] (V)			AC690	
				DC500	
	Rated impulse withstand voltage [Uimp] (kV)			8	
Rated short-circuit breaking capacity IEC 60947-2 K 60947-2	Ultimate [Icu] (kA r.m.s.)	AC660/690V, 50-60Hz		10	25
		AC480/500V, 50-60Hz		65	85
		AC440/460V, 50-60Hz		85	100
		AC380/415V, 50-60Hz		100	130
		AC220/240V, 50-60Hz		130	150
		DC250V		65	85
		DC125V		100	100
	Service [Ics]	% of [Icu]		100	
Trip mechanism & Protection characteristics	Thermal magnetic	Adjustable instantaneous		(6-7-8-9-10-11-12-13)×In	
Mounting	Direct mounting by screw			○	
	Plug-in	for Switchboard	Both line & load side	○	
			Line side only	○	
Terminal connection		Screw		○	
		Bus bar		○	
Durability (times)	Mechanical operation			25,000	
	Electrical operation			10,000	
Dimensions (mm) 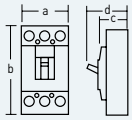		3P	a Width	105	
			b Height	165	
			c Depth	86.5	
			d	112	
Weight (kg, breaker only)		3P		1.8	

※ The breaking capacity highlighted with blue and thick type is standard nominal value for each model in this catalogue.

▪ Accessories

• Signal

Auxiliary switch	1C, right-hand-side					
	AUX 12UP R1					
Trip alarm switch	1C, left-hand-side					
	ALT 12UP L1					
Shunt trip[1]	DC24V	DC100-110V	AC100-120V	AC200-230V	AC380-415V	AC440-480V
	SHT 12UP A	SHT 12UP C	SHT 12UP F	SHT 12UP H	SHT 12UP B	SHT 12UP D
Under voltage trip[2]	DC24V	DC100-110V	AC100-120V	AC200-230V	AC380-415V	AC440-480
	*UVT 12UP J	*UVT 12UP L	*UVT 12UP N	*UVT 12UP P	*UVT 12UP Q	*UVT 12UP R

※ 1] The permissible operating voltage: 85-110% of rated voltage for AC , 75-125% for DC
2] The permissible operating voltage: 85-110% of rated voltage(AC), 85-125% of rated voltage(DC)
The tripping voltage: 20-70% of rated voltage(AC/DC)
Be sure not to use UVT for the electrical interlock system.
*Reset is possible without power.

• Operating

Operating handle[1]	Power supply direction		Upper	Right	Left
	Surface	S type	TFG 12UPS U4	TFG 12UPS R4	TFG 12UPS L4
		L type	TFG 12UPL U4	–	TFG 12UPL L4
	Extended	S type	TFH 12UPS		
		L type	TFH 12UPL		
Motor operator[2]			DC24V	AC/DC110V	AC/DC220V
			MOT 12UP DC24	MOT 12UP ADC110	MOT 12UP ADC220
Mechanical interlock			MIF 12UP 3		
Padlock plate[3]			PLD 12UP		

※ 1] For detail type information, please refer to page 195-202. 2] Motor operator is not recommended for marine application.
3] Padlock is not supplied.

• Mounting

Plug-in	Structure		For both line & load side	For line side only
	Mounting base		TDM 12NEP	TDM 12NEF
	Connection block[1]	6C contact	CBM 26NE 6	–
		12C contact	CBM 26NE 6[2]	–

※ 1] Connection blocks are required for internal accessory installation in both line & load side plug-in type 3P breaker.
2] 2EA shall be ordered for 12C contact.

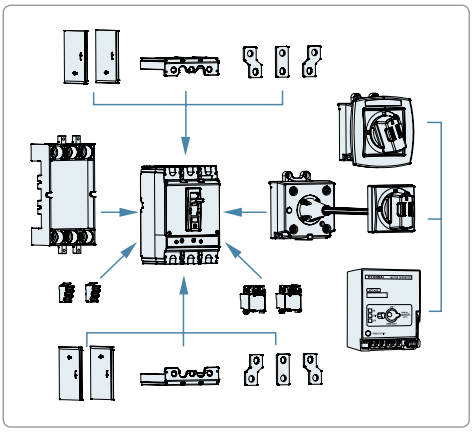

• Terminal

Terminal bus bar	3 pole (6EA/SET)	TBB 12NE 3
Cage terminal block	3EA/SET	CTB 12UP 3S
Terminal cover[1]	3 pole	TCF 12UP 3
Interpole barrier[2]	4EA/SET	TQQ 12NE 3P

※ 1] For both line and load side of breaker, 2EA shall be ordered.
2] Supplied as standard component
Required quantity for both line and load side of breaker: 4EA

▪ Standard order code and unit

• Adjustable instantaneous only / recommended for motor protection

Model / Breaking capacity at AC380/415V	Rated current	3 pole		Model / Breaking capacity at AC380/415V	Rated current	3 pole		Specification	Category
		Code	Unit (EA)			Code	Unit (EA)		
UPB100H 100kA	2.5A	UPB100H 3PMPS0000C 002.5	8	UPB100L 130kA	2.5A	UPB100L 3PMPS0000C 002.5	8	Screw type terminal connection, No option, 50/60Hz	MCCB /M4
	3.2A	UPB100H 3PMPS0000C 003.2	8		3.2A	UPB100L 3PMPS0000C 003.2	8		
	6.3A	UPB100H 3PMPS0000C 006.3	8		6.3A	UPB100L 3PMPS0000C 006.3	8		
	12.5A	UPB100H 3PMPS0000C 012.5	8		12.5A	UPB100L 3PMPS0000C 012.5	8		
	20A	UPB100H 3PMPS0000C 00020	8		20A	UPB100L 3PMPS0000C 00020	8		
	32A	UPB100H 3PMPS0000C 00032	8		32A	UPB100L 3PMPS0000C 00032	8		
	50A	UPB100H 3PMPS0000C 00050	8		50A	UPB100L 3PMPS0000C 00050	8		
	63A	UPB100H 3PMPS0000C 00063	8		63A	UPB100L 3PMPS0000C 00063	8		
	80A	UPB100H 3PMPS0000C 00080	8		80A	UPB100L 3PMPS0000C 00080	8		
	100A	UPB100H 3PMPS0000C 00100	8		100A	UPB100L 3PMPS0000C 00100	8		

Specifications and Standard Order Codes

| Motor protection / UPB type 250AF |

- UPB250H 100kA
- UPB250L 130kA





				UPB250H	UPB250L
Number of poles (P)				3	
Degree of protection (with terminal cover)				IP20	
Utilization category				A	
Suitability of isolation				○	
Protection				instantaneous, short-circuit	
Rating	Rated current (A)			125,150,175,200,225	
	Rated insulation voltage [Ui] (V)			AC750	
	Rated operational voltage [Ue] (V)			AC690	
				DC500	
	Rated impulse withstand voltage [Uimp] (kV)			8	
Rated short-circuit breaking capacity IEC 60947-2 K 60947-2	Ultimate [Icu] (kA r.m.s.)	AC660/690V, 50-60Hz		10	25
		AC480/500V, 50-60Hz		65	85
		AC440/460V, 50-60Hz		85	100
		AC380/415V, 50-60Hz		100	130
		AC220/240V, 50-60Hz		130	150
		DC250V		65	85
		DC125V		100	100
	Service [Ics]	% of [Icu]		100	
Trip mechanism & Protection characteristics	Thermal magnetic	Adjustable instantaneous		(5-6-7-8-9-10)×In	
Mounting	Direct mounting by screw			○	
	Plug-in	for Switchboard	Both line & load side	○	
			Line side only	○	
Terminal connection		Screw		○	
		Bus bar		○	
Durability (times)	Mechanical operation			25,000	
	Electrical operation			10,000	
Dimensions (mm) 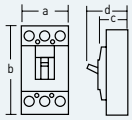	3P	a	Width	105	
		b	Height	165	
		c	Depth	86.5	
		d		112	
Weight (kg, breaker only)	3P			2.0	

※ The breaking capacity highlighted with blue and thick type is standard nominal value for each model in this catalogue.

▪ Accessories

• Signal

Auxiliary switch	1C, right-hand-side					
	AUX 12UP R1					
Trip alarm switch	1C, left-hand-side					
	ALT 12UP L1					
Shunt trip[1]	DC24V	DC100-110V	AC100-120V	AC200-230V	AC380-415V	AC440-480V
	SHT 12UP A	SHT 12UP C	SHT 12UP F	SHT 12UP H	SHT 12UP B	SHT 12UP D
Under voltage trip[2]	DC24V	DC100-110V	AC100-120V	AC200-230V	AC380-415V	AC440-480V
	*UVT 12UP J	*UVT 12UP L	*UVT 12UP N	*UVT 12UP P	*UVT 12UP Q	*UVT 12UP R

※ 1] The permissible operating voltage: 85-110% of rated voltage for AC , 75-125% for DC
2] The permissible operating voltage: 85-110% of rated voltage(AC), 85-125% of rated voltage(DC)
The tripping voltage: 20-70% of rated voltage(AC/DC)
Be sure not to use UVT for the electrical interlock system.
*Reset is possible without power.

• Operating

Operating handle[1]	Power supply direction		Upper	Right	Left
	Surface	S type	TFG 12UPS U4	TFG 12UPS R4	TFG 12UPS L4
		L type	TFG 12UPL U4	–	TFG 12UPL L4
	Extended	S type	TFH 12UPS		
		L type	TFH 12UPL		
Motor operator[2]			DC24V	AC/DC110V	AC/DC220V
			MOT 12UP DC24	MOT 12UP ADC110	MOT 12UP ADC220
Mechanical interlock			MIF 12UP 3		
Padlock plate[3]			PLD 12UP		

※ 1] For detail type information, please refer to page 195-202. 2] Motor operator is not recommended for marine application.
3] Padlock is not supplied.

• Mounting

Plug-in	Structure		For both line & load side	For line side only
	Mounting base		TDM 12NEP	TDM 12NEF
	Connection block[1]	6C contact	CBM 26NE 6	–
		12C contact	CBM 26NE 6[2]	–

※ 1] Connection blocks are required for internal accessory installation in both line & load side plug-in type 3P breaker.
2] 2EA shall be ordered for 12C contact.

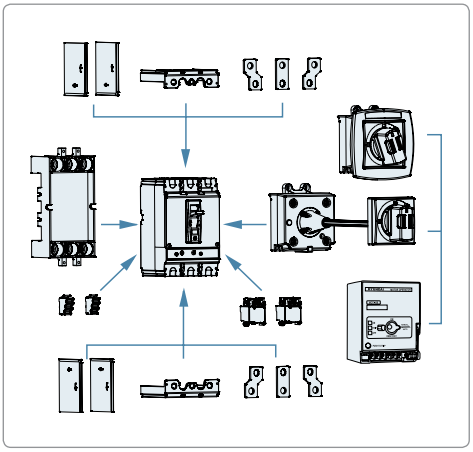

• Terminal

Terminal bus bar	3 pole (6EA/SET)	TBB 12NE 3
Cage terminal block	3EA/SET	CTB 12UP 3S
Terminal cover[1]	3 pole	TCF 12UP 3
	4 pole	TCF 12UP 4
Interpole barrier[2]	4EA/SET	TQQ 12NE 3P

※ 1] For both line and load side of breaker, 2EA shall be ordered.
2] Supplied as standard component
Required quantity for both line and load side of breaker: 4EA

▪ Standard order code and unit

• Adjustable instantaneous only / recommended for motor protection

Model / Breaking capacity at AC380/415V	Rated current	3 pole		Model / Breaking capacity at AC380/415V	Rated current	3 pole		Specification	Category
		Code	Unit (EA)			Code	Unit (EA)		
UPB250H 100kA	125A	UPB250H 3PMPS0000C 00125	8	UPB250L 130kA	125A	UPB250L 3PMPS0000C 00125	8	Screw type terminal connection, No option, 50/60Hz	MCCB /M4
	150A	UPB250H 3PMPS0000C 00150	8		150A	UPB250L 3PMPS0000C 00150	8		
	175A	UPB250H 3PMPS0000C 00175	8		175A	UPB250L 3PMPS0000C 00175	8		
	200A	UPB250H 3PMPS0000C 00200	8		200A	UPB250L 3PMPS0000C 00200	8		
	225A	UPB250H 3PMPS0000C 00225	8		225A	UPB250L 3PMPS0000C 00225	8		

Specifications and Standard Order Codes

| Q-class (for nuclear power plant application) / HBL type 100AF |

- HBL103U 85kA
- HBL103UQ 85kA
- HBL103UM 85kA
- HBL103UMQ 85kA

				HBL103U	HBL103UQ	HBL103UM	HBL103UMQ
							
Number of poles (P)				3			
Degree of protection (with terminal cover)				IP20			
Utilization category				A			
Suitability of isolation				○			
Protection				overload, inst., short-circuit		instantaneous, short-circuit	
Rating	Rated current (A)			15, 20, 30, 40, 50, 60, 75, 100		2.5, 3.2, 6.3, 12.5, 20, 32, 50, 63, 80, 100	
	Rated insulation voltage [Ui] (V)			AC750			
	Rated operational voltage [Ue] (V)			AC690			
				DC500			
	Rated impulse withstand voltage [Uimp] (kV)			8			
Rated short-circuit breaking capacity IEC 60947-2 K 60947-2	Ultimate [Icu] (kA r.m.s.)	AC660/690V, 50-60Hz		25	25	25	25
		AC480/500V, 50-60Hz		85	85	85	85
		AC440/460V, 50-60Hz		100	100	100	100
		AC380/415V, 50-60Hz		150	150	150	150
		AC220/240V, 50-60Hz		200	200	200	200
		DC250V		100	100	100	100
		DC125V		100	100	100	100
	Service [Ics]	% of [Icu]		100			
Trip mechanism & Protection characteristics	Thermal magnetic	Fixed thermal,		○		–	
		Fixed instantaneous	INST	10×In		–	
		Adjustable instantaneous		–		(6-7-8-9-10-11-12-13)×In	
Q-class	Non-E1			○	–	○	–
	E1			–	○	–	○
Mounting	Direct mounting by screw			○			
Terminal connection		Screw		○			
		Bus bar		○			
Durability (times)	Mechanical operation			25,000			
	Electrical operation			10,000			
Dimensions (mm) 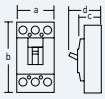		3P	a Width	105			
			b Height	165			
			c Depth	86.5			
			d	112			
Weight (kg, breaker only)		3P		1.8			

※ The breaking capacity highlighted with blue and thick type is standard nominal value for each model in this catalogue.

▪ Accessories

• Signal

Auxiliary switch	1C, right-hand-side				
	AUX 12UP R1				
Trip alarm switch	1C, left-hand-side				
	ALT 12UP L1				
Shunt trip[1]	DC24V	DC100-110V	AC100-120V	AC200-230V	AC380-415V	AC440-480V
	SHT 12UP A	SHT 12UP C	SHT 12UP F	SHT 12UP H	SHT 12UP B	SHT 12UP D
Under voltage trip[2]	DC24V	DC100-110V	AC100-120V	AC200-230V	AC380-415V	AC440-480V
	*UVT 12UP J	*UVT 12UP L	*UVT 12UP N	*UVT 12UP P	*UVT 12UP Q	*UVT 12UP R

※ - Signal accessories shall be installed in breaker before ex-working.
1] The permissible operating voltage: 85-110% of rated voltage for AC , 75-125% for DC
2] The permissible operating voltage: 85-110% of rated voltage(AC), 85-125% of rated voltage(DC)
The tripping voltage: 20-70% of rated voltage(AC/DC)
Be sure not to use UVT for the electrical interlock system.
*Reset is possible without power.

• Operating

Operating handle[1]	Power supply direction		Upper	Left	
	Surface	HBL103U, HBL103UM	TFG 20U U4	TFG 20U L4	
		HBL103UQ, HBL103UMQ	TFG 20UQ U4	TFG 20UQ L4	
Motor operator[2]			DC24V	AC/DC110V	AC/DC220V
			MOT 12UP DC24	MOT 12UP ADC110	MOT 12UP ADC220
Mechanical interlock			MIF 12UP 3		
Padlock plate[3]			PLD 12UP		

※ 1] For detail type information, please refer to page 195-202.
2] Motor operator is not recommended for marine application.
3] Padlock is not supplied.

• Terminal

Terminal bus bar	6EA/SET	TBB 12NE 3
Cage terminal block	3EA/SET	CTB 12UP 3S
Terminal cover[1]		TCF 12UP 3
Interpole barrier[2]	4EA/SET	TQQ 12NE 3P

※ 1] For both line and load side of breaker, 2EA shall be ordered.
2] Supplied as standard component
Required quantity for both line and load side of breaker: 4EA

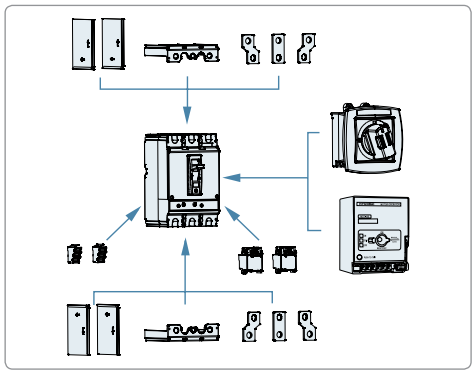

▪ Standard order code and unit

• Fixed thermal & fixed instantaneous

40/45℃

Model / Breaking capacity at AC480/500V	Rated current	3 pole, Non-E1 class		Model / Breaking capacity at AC480/500V	Rated current	3 pole, E1 class		Specification	Category
		Code	Unit (EA)			Code	Unit (EA)		
HBL103U 85kA	15A	HBL103U 3PT4S0000C 00015	8	HBL103UQ 85kA	15A	HBL103UQ 3PT4S0000C 00015	8	Screw type terminal connection, No option, 50/60Hz	MCCB /M1
	20A	HBL103U 3PT4S0000C 00020	8		20A	HBL103UQ 3PT4S0000C 00020	8		
	30A	HBL103U 3PT4S0000C 00030	8		30A	HBL103UQ 3PT4S0000C 00030	8		
	40A	HBL103U 3PT4S0000C 00040	8		40A	HBL103UQ 3PT4S0000C 00040	8		
	50A	HBL103U 3PT4S0000C 00050	8		50A	HBL103UQ 3PT4S0000C 00050	8		
	60A	HBL103U 3PT4S0000C 00060	8		60A	HBL103UQ 3PT4S0000C 00060	8		
	75A	HBL103U 3PT4S0000C 00075	8		75A	HBL103UQ 3PT4S0000C 00075	8		
	100A	HBL103U 3PT4S0000C 00100	8		100A	HBL103UQ 3PT4S0000C 00100	8		

50℃

Model / Breaking capacity at AC480/500V	Rated current	3 pole, Non-E1 class		Model / Breaking capacity at AC480/500V	Rated current	3 pole, E1 class		Specification	Category
		Code	Unit (EA)			Code	Unit (EA)		
HBL103U 85kA	15A	HBL103U 3PT5S0000C 00015	8	HBL103UQ 85kA	15A	HBL103UQ 3PT5S0000C 00015	8	Screw type terminal connection, No option, 50/60Hz	MCCB /M1
	20A	HBL103U 3PT5S0000C 00020	8		20A	HBL103UQ 3PT5S0000C 00020	8		
	30A	HBL103U 3PT5S0000C 00030	8		30A	HBL103UQ 3PT5S0000C 00030	8		
	40A	HBL103U 3PT5S0000C 00040	8		40A	HBL103UQ 3PT5S0000C 00040	8		
	50A	HBL103U 3PT5S0000C 00050	8		50A	HBL103UQ 3PT5S0000C 00050	8		
	60A	HBL103U 3PT5S0000C 00060	8		60A	HBL103UQ 3PT5S0000C 00060	8		
	75A	HBL103U 3PT5S0000C 00075	8		75A	HBL103UQ 3PT5S0000C 00075	8		
	100A	HBL103U 3PT5S0000C 00100	8		100A	HBL103UQ 3PT5S0000C 00100	8		

• Adjustable instantaneous only / recommended for motor protection

Model / Breaking capacity at AC480/500V	Rated current	3 pole, Non-E1 class		Model / Breaking capacity at AC480/500V	Rated current	3 pole, E1 class		Specification	Category
		Code	Unit (EA)			Code	Unit (EA)		
HBL103UM 85kA	2.5A	HBL103UM 3PMPS0000C 002.5	8	HBL103UMQ 85kA	2.5A	HBL103UMQ 3PMPS0000C 002.5	8	Screw type terminal connection, No option, 50/60Hz	MCCB /M4
	3.2A	HBL103UM 3PMPS0000C 003.2	8		3.2A	HBL103UMQ 3PMPS0000C 003.2	8		
	6.3A	HBL103UM 3PMPS0000C 006.3	8		6.3A	HBL103UMQ 3PMPS0000C 006.3	8		
	12.5A	HBL103UM 3PMPS0000C 012.5	8		12.5A	HBL103UMQ 3PMPS0000C 012.5	8		
	20A	HBL103UM 3PMPS0000C 00020	8		20A	HBL103UMQ 3PMPS0000C 00020	8		
	32A	HBL103UM 3PMPS0000C 00032	8		32A	HBL103UMQ 3PMPS0000C 00032	8		
	50A	HBL103UM 3PMPS0000C 00050	8		50A	HBL103UMQ 3PMPS0000C 00050	8		
	63A	HBL103UM 3PMPS0000C 00063	8		63A	HBL103UMQ 3PMPS0000C 00063	8		
	80A	HBL103UM 3PMPS0000C 00080	8		80A	HBL103UMQ 3PMPS0000C 00080	8		
	100A	HBL103UM 3PMPS0000C 00100	8		100A	HBL103UMQ 3PMPS0000C 00100	8		

Specifications and Standard Order Codes

| Q-class (for nuclear power plant application) / HBL type 225AF |

- HBL203U 85kA
- HBL203UQ 85kA
- HBL203UM 85kA
- HBL203UMQ 85kA

				HBL203U	HBL203UQ	HBL203UM	HBL203UMQ
							
Number of poles (P)				3			
Degree of protection (with terminal cover)				IP20			
Utilization category				A			
Suitability of isolation				○			
Protection				overload, inst., short-circuit		instantaneous, short-circuit	
Rating	Rated current (A)			125, 150, 175, 200, 225			
	Rated insulation voltage [Ui] (V)			AC750			
	Rated operational voltage [Ue] (V)			AC690			
				DC500			
	Rated impulse withstand voltage [Uimp] (kV)			8			
Rated short-circuit breaking capacity IEC 60947-2 K 60947-2	Ultimate [Icu] (kA r.m.s.)	AC660/690V, 50-60Hz		25	25	25	25
		AC480/500V, 50-60Hz		85	85	85	85
		AC440/460V, 50-60Hz		100	100	100	100
		AC380/415V, 50-60Hz		150	150	150	150
		AC220/240V, 50-60Hz		200	200	200	200
		DC250V		100	100	100	100
		DC125V		100	100	100	100
	Service [Ics]	% of [Icu]		100			
Trip mechanism & Protection characteristics	Thermal magnetic	Fixed thermal,		○		–	
		Fixed instantaneous	INST	10×In		–	
		Adjustable instantaneous		–		(5-6-7-8-9-10)×In	
Q-class	Non-E1			○	–	○	–
	E1			–	○	–	○
Mounting	Direct mounting by screw			○			
	Plug-in	for Switchboard	Both line & load side	○			
			Line side only	○			
Terminal connection		Screw		○			
		Bus bar		○			
Durability (times)	Mechanical operation			25,000			
	Electrical operation			10,000			
Dimensions (mm)	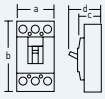	3P	a Width	105			
			b Height	165			
			c Depth	86.5			
			d	112			
Weight (kg, breaker only)		3P		2.0			

※ The breaking capacity highlighted with blue and thick type is standard nominal value for each model in this catalogue.

▪ Accessories

• Signal

Auxiliary switch	1C, right-hand-side					
	AUX 12UP R1					
Trip alarm switch	1C, left-hand-side					
	ALT 12UP L1					
Shunt trip[1]	DC24V	DC100-110V	AC100-120V	AC200-230V	AC380-415V	AC440-480V
	SHT 12UP A	SHT 12UP C	SHT 12UP F	SHT 12UP H	SHT 12UP B	SHT 12UP D
Under voltage trip[2]	DC24V	DC100-110V	AC100-120V	AC200-230V	AC380-415V	AC440-480V
	*UVT 12UP J	*UVT 12UP L	*UVT 12UP N	*UVT 12UP P	*UVT 12UP Q	*UVT 12UP R

※ - Signal accessories shall be installed in breaker before ex-working.
1] The permissible operating voltage: 85-110% of rated voltage for AC , 75-125% for DC
2] The permissible operating voltage: 85-110% of rated voltage(AC), 85-125% of rated voltage(DC)
The tripping voltage: 20-70% of rated voltage(AC/DC)
Be sure not to use UVT for the electrical interlock system.
*Reset is possible without power.

• Operating

Operating handle [1]	Power supply direction		Upper	Left	
	Surface	HBL203U, HBL203UM	TFG 20U U4	TFG 20U L4	
		HBL203UQ, HBL203UMQ	TFG 20UQ U4	TFG 20UQ L4	
	Extended	HBL203U, HBL203UM	TFH 20U		
		HBL203UQ, HBL203UMQ	TFH 20UQ		
Motor operator [2]			DC24V	AC/DC110V	AC/DC220V
			MOT 12UP DC24	MOT 12UP ADC110	MOT 12UP ADC220
Mechanical interlock			MIF 12UP 3		
Padlock plate [3]			PLD 12UP		

※ 1] For detail type information, please refer to page 195-202.
2] Motor operator is not recommended for marine application.
3] Padlock is not supplied.

• Terminal

Terminal bus bar	6EA/SET	TBB 12NE 3
Cage terminal block	3EA/SET	CTB 12UP 3S
Terminal cover [1]		TCF 12UP 3
Interpole barrier [2]	4EA/SET	TQQ 12NE 3P

※ 1] For both line and load side of breaker, 2EA shall be ordered.
2] Supplied as standard component
Required quantity for both line and load side of breaker: 4EA

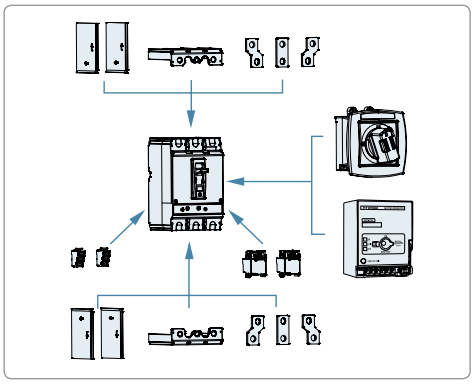

▪ Standard order code and unit

• Fixed thermal & fixed instantaneous

40/45℃

Model / Breaking capacity at AC480/500V	Rated current	3 pole, Non-E1 class		Model / Breaking capacity at AC480/500V	Rated current	3 pole, E1 class		Specification	Category
		Code	Unit (EA)			Code	Unit (EA)		
HBL203U 85kA	125A	HBL203U 3PT4S0000C 00125	8	HBL203UQ 85kA	125A	HBL203UQ 3PT4S0000C 00125	8	Screw type terminal connection, No option, 50/60Hz	MCCB /M1
	150A	HBL203U 3PT4S0000C 00150	8		150A	HBL203UQ 3PT4S0000C 00150	8		
	175A	HBL203U 3PT4S0000C 00175	8		175A	HBL203UQ 3PT4S0000C 00175	8		
	200A	HBL203U 3PT4S0000C 00200	8		200A	HBL203UQ 3PT4S0000C 00200	8		
	225A	HBL203U 3PT4S0000C 00225	8		225A	HBL203UQ 3PT4S0000C 00225	8		

50℃

Model / Breaking capacity at AC480/500V	Rated current	3 pole, Non-E1 class		Model / Breaking capacity at AC480/500V	Rated current	3 pole, E1 class		Specification	Category
		Code	Unit (EA)			Code	Unit (EA)		
HBL203U 85kA	125A	HBL203U 3PT5S0000C 00125	8	HBL203UQ 85kA	125A	HBL203UQ 3PT5S0000C 00125	8	Screw type terminal connection, No option, 50/60Hz	MCCB /M1
	150A	HBL203U 3PT5S0000C 00150	8		150A	HBL203UQ 3PT5S0000C 00150	8		
	175A	HBL203U 3PT5S0000C 00175	8		175A	HBL203UQ 3PT5S0000C 00175	8		
	200A	HBL203U 3PT5S0000C 00200	8		200A	HBL203UQ 3PT5S0000C 00200	8		
	225A	HBL203U 3PT5S0000C 00225	8		225A	HBL203UQ 3PT5S0000C 00225	8		

• Adjustable instantaneous only / recommended for motor protection

Model / Breaking capacity at AC480/500V	Rated current	3 pole, Non-E1 class		Model / Breaking capacity at AC480/500V	Rated current	3 pole, E1 class		Specification	Category
		Code	Unit (EA)			Code	Unit (EA)		
HBL203UM 85kA	125A	HBL203UM 3PMPS0000C 00125	8	HBL203UMQ 85kA	125A	HBL203UMQ 3PMPS0000C 00125	8	Screw type terminal connection, No option, 50/60Hz	MCCB /M4
	150A	HBL203UM 3PMPS0000C 00150	8		150A	HBL203UMQ 3PMPS0000C 00150	8		
	175A	HBL203UM 3PMPS0000C 00175	8		175A	HBL203UMQ 3PMPS0000C 00175	8		
	200A	HBL203UM 3PMPS0000C 00200	8		200A	HBL203UMQ 3PMPS0000C 00200	8		
	225A	HBL203UM 3PMPS0000C 00225	8		225A	HBL203UMQ 3PMPS0000C 00225	8		

Specifications and Standard Order Codes

| Switch disconnector / UAD type 50-100AF |

- UAD50C
- UAD50S
- UAD100R





				UAD50C	UAD50S	UAD100R
Ampere frame size				50AF		100AF
Number of poles (P)				3	3	3
Degree of protection (with terminal cover)				IP20	IP20	IP20
Utilization category				A	A	A
Suitability of isolation				○	○	○
Rating	Conventional thermal current [Ith] (A)			50	50	100
	Rated current (A)			50	50	100
	Rated insulation voltage [Ui] (V)			AC690	AC690	AC690
	Rated operational voltage [Ue] (V)			AC660	AC660	AC660
				DC250	DC250	DC250
	Rated impulse withstand voltage [Uimp] (kV)			6	6	6
	Rated short-circuit making capacity [Icm] (kA peak at AC460V)			17	52.5	52.5
	Rated short-time withstand current for 1sec. [Icw] (kA r.m.s)			1	1	1
Durability (times)	Mechanical operation			25,000	25,000	25,000
	Electrical operation			15,000	15,000	10,000
Mounting	Direct mounting by screw			○	○	○
	Plug-in	for Switchboard	Both line & load side	○	○	○
			Line side only	○	○	○
		for Distribution board		○	○	○
	DIN-rail	with DIN-rail adaptor		–	○	○
Terminal connection		Screw		○	○	○
Dimensions (mm) 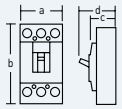		3P	a Width	75	75	75
			b Height	130	130	130
			c Depth	60	60	60
			d	82	82	82
Weight (kg, breaker only)		3P		0.65	0.78	0.78

▪ Accessories

• Signal

Auxiliary switch	1C, right-hand-side	1C, left-hand-side	2C,right-hand-side			
UAD50C	AUX 10A R1	–	AUX 10A R2			
UAD50S, UAD100R	AUX 10UA R1	AUX 10UA L1	–			
Trip alarm switch	1C, right-hand-side	1C, left-hand-side				
UAD50C	ALT 10A R1	–				
UAD50S, UAD100R	ALT 10UA R1	ALT 10UA L1				
Shunt trip [1]	DC24V	DC100-110V	AC100-120V	AC200-230V	AC380-415V	AC440-480V
UAD50C	SHT 10A A	SHT 10A C	SHT 10A F	SHT 10A H		
UAD50S, UAD100R	SHT 10UA A	–	SHT 10UA F	SHT 10UA H	SHT 10UA B	SHT 10UA D
Under voltage trip [2]	DC24V	DC100-110V	AC100-120V	AC200-230V	AC380-415V	AC440-480V
UAD50C	*UVT 10A J	*UVT 10A L	*UVT 10A N	*UVT 10A P	*UVT 10A Q	*UVT 10A R
UAD50S, UAD100R	UVT 10UA J	UVT 10UA L	UVT 10UA N	UVT 10UA P	UVT 10UA Q	UVT 10UA R

※ 1] The permissible operating voltage: 85-110% of rated voltage for AC , 75-125% for DC
2] The permissible operating voltage: 85-110% of rated voltage(AC), 85-125% of rated voltage(DC)
The tripping voltage: 20-70% of rated voltage(AC/DC)
Be sure not to use UVT for the electrical interlock system.
*Reset is possible without power.

• Operating

			UAD50C			UAD50S, UAD100R		
Operating handle[1]	Power supply direction		Upper	Right	Left	Upper	Right	Left
	Surface	S type	TFG 10AS U4	TFG 10AS R4	TFG 10AS L4	TFG 10UAS U4	TFG 10UAS R4	TFG 10UAS L4
		L type	TFG 10AL U4	–	TFG 10AL L4	TFG 10UAL U4	–	TFG 10UAL L4
	Extended	S type	TFH 10AS			TFH 10UAS		
		L type	TFH 10AL			TFH 10UAL		
Motor operator[2]			DC24V	AC/DC110V	AC/DC220V	DC24V	AC/DC110V	AC/DC220V
			MOT 10A DC24	MOT 10A ADC110	MOT 10A ADC220	MOT 10UA DC24	MOT 10UA ADC110	MOT 10UA ADC220
Mechanical interlock			MIF 10A 3			MIF 10UA 3		
Padlock plate[3]			PLD 10UA					

※ 1] For detail type information, please refer to page 195-202.
2] Motor operator is not recommended for marine application.
3] Padlock is not supplied.

• Mounting

DIN-rail adaptor[1]			DRA 10UA	
Plug-in	Structure		For both line & load side	For line side only
	Mounting base		TDM 10AP	TDM 10AF
	Connection block[2]	2C contact	CBM 10AB 2	–
		3C contact	CBM 10AB 3	–
	Conn block barrier		CBM BARR	–

※ 1] Available for UAD50S, UAD100R
2] Connection blocks are required for internal accessory installation in both line & load side plug-in type 3P breaker.

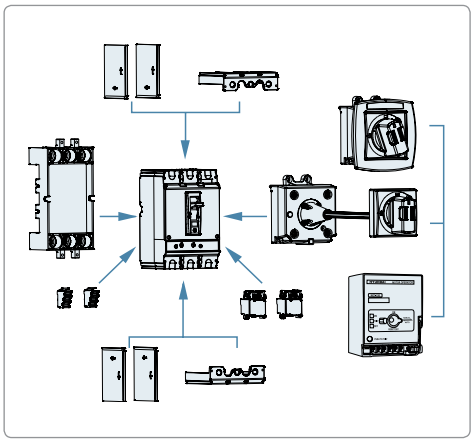

• Terminal

		UAD50C, UAD50S	UAD100R
Cage terminal block	3EA/SET	CTB 10A 3S50	CTB 10A 3S100
Terminal cover[1]		TCF 10AP 3	
Interpole barrier[2]	2EA/SET	TQQ 10A 3PLINE	

※ 1] For both line and load side of breaker, 2EA shall be ordered.
2] Supplied as standard component
Required quantity for both line and load side of breaker: 4EA

▪ Standard order code and unit

Model	Rated current	3 pole		Originated MCCB model	Specification	Category
		Code	Unit (EA)			
UAD50C	50A	UAD50C 3PDS0000C 00050	20	UAB50C	Screw type terminal connection, No option, 50/60Hz	MCCB/M5
UAD50S	50A	UAD50S 3PDS0000C 00050	20	UAB50S		
UAD100R	100A	UAD100R 3PDS0000C 00100	20	UAB100R		

Specifications and Standard Order Codes

| Switch disconnector / UCD type 50-250AF |

- UCD50H
- UCD100H
- UCD250S
- UCD100S
- UCD160H
- UCD250H



				UCD50H	UCD100S	UCD100H	UCD160H	UCD250S	UCD250H
Ampere frame size				50AF	100AF	125AF	160AF	250AF	
Number of poles (P)				3	3	3	3	3	3
Degree of protection (with terminal cover)				IP20	IP20	IP20	IP20	IP20	IP20
Utilization category				A	A	A	A	A	A
Suitability of isolation				○	○	○	○	○	○
Rating	Conventional thermal current [Ith] (A)								
	Rated current (A)			50	100	125	160	250	250
	Rated insulation voltage [Ui] (V)			AC690	AC690	AC690	AC690	AC690	AC690
	Rated operational voltage [Ue] (V)			AC660	AC660	AC660	AC660	AC660	AC660
				DC250	DC250	DC250	DC250	DC250	DC250
	Rated impulse withstand voltage [Uimp] (kV)			6	6	6	6	6	6
	Rated short-circuit making capacity [Icm] (kA peak at AC460V)			105	73.5	105	105	73.5	105
	Rated short-time withstand current for 1sec. [Icw] (kA r.m.s.)			1	1	1	2	2	2
Durability (times)	Mechanical operation			25,000	25,000	25,000	25,000	25,000	25,000
	Electrical operation			10,000	10,000	10,000	10,000	10,000	10,000
Mounting	Direct mounting by screw			○	○	○	○	○	○
	Plug-in	for Switchboard	Both line & load side	○	○	○	○	○	○
			Line side only	○	○	○	○	○	○
		for Distribution board		○	○	○	○	○	○
Terminal connection	Screw			○	○	○	○	○	○
	Bus bar			–	–	–	○	○	○
Dimensions (mm) 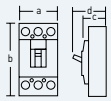	3P	a	Width	90	90	90	105	105	105
		b	Height	155	155	155	165	164	165
		c	Depth	60	60	60	60	60	60
		d		84.5	84.5	84.5	84.5	84	84.5
Weight (kg, breaker only)	3P			1	1	1	1.3	1.2	1.3

▪ Accessories

• Signal

Auxiliary switch	1C, left-hand-side			2C, left-hand-side		
UCD100S	AUX 10B L1			–		
UCD250S	AUX 20C L1			–		
UCD50H, UCD100H, UCD160H, UCD250H	AUX 20FG L1			AUX 12FG L2		
Trip alarm switch	1C, right-hand-side			1C, left-hand-side		
UCD100S	–			ALT 10B L1		
UCD250S	–			ALT 20C L		
UCD50H, UCD100H, UCD160H, UCD250H	ALT 12FG R1			ALT 12FG L1		
Shunt trip [1]	DC24V	DC100-110V	AC100-120V	AC200-230V	AC380-415V	AC440-480V
UCD100S	SHT 10B A	–	SHT 10B F	SHT 10B H		
UCD250S	SHT 20C A	–	SHT 20C F	SHT 20C H		
UCD50H, UCD100H, UCD160H, UCD250H	SHT 12FG A	SHT 12FG C	SHT 12FG F	SHT 12FG H	SHT 12FG B	SHT 12FG D
Under voltage trip [2]	DC24V	DC100-110V	AC100-120V	AC200-230V	AC380-415V	AC440-480V
UCD100S	UVT 10B J	UVT 10B L	UVT 10B N	UVT 10B P	UVT 10B Q	UVT 10B R
UCD250S	UVT 20C J	UVT 20C L	UVT 20C N	UVT 20C P	UVT 20C Q	UVT 20C R
UCD50H, UCD100H, UCD160H, UCD250H	UVT 12FG J	UVT 12FG L	UVT 12FG N	UVT 12FG P	UVT 12FG Q	UVT 12FG R

※ 1] The permissible operating voltage: 85-110% of rated voltage for AC , 75-125% for DC
2] The permissible operating voltage: 85-110% of rated voltage(AC), 85-125% of rated voltage(DC) The tripping voltage: 20-70% of rated voltage(AC/DC)
Be sure not to use UVT for the electrical interlock system.

• Operating

			UCD50H, UDC100H			UCD100S		
Operating handle[1]	Power supply direction		Upper	Right	Left	Upper	Right	Left
	Surface	S type	TFG 10UFS U4	TFG 10UFS R4	TFG 10UFS L4	TFG 10BS U4	TFG 10BS R4	TFG 10BS L4
		L type	TFG 10UFL U4	–	TFG 10UFL L4	TFG 10BL U4	–	TFG 10BL L4
	Extended	S type	TFH 10UFS			TFH 10BS		
		L type	TFH 10UFL			TFH 10BL		
Motor operator[2]			DC24V	AC/DC110V	AC/DC220V	DC24V	AC/DC110V	AC/DC220V
			MOT 10F DC24	MOT 10F ADC110	MOT 10F ADC220	MOT 10UB DC24	MOT 10UB ADC110	MOT 10UB ADC220
Mechanical interlock			MIF 10UF 3			MIF 10UF 3		
Padlock plate[3]			PLD 10UF					

			UCD250S			UCD160H, UCD250H		
Operating handle[1]	Power supply direction		Upper	Right	Left	Upper	Right	Left
	Surface	S type	TFG 20CS U4	TFG 20CS R4	TFG 20CS L4	TFG 20UGS U4	TFG 20UGS R4	TFG 20UGS L4
		L type	TFG 20CL U4	–	TFG 20CL L4	TFG 20UGL U4	–	TFG 20UGL L4
	Extended	S type	TFH 20CS			TFH 20UGS		
		L type	TFH 20CL			TFH 20UGL		
Motor operator[2]			DC24V	AC/DC110V	AC/DC220V	DC24V	AC/DC110V	AC/DC220V
			MOT 20UC DC24	MOT 20UC ADC110	MOT 20UC ADC220	MOT 20G DC24	MOT 20G ADC110	MOT 20G ADC220
Mechanical interlock			MIF 20UG 3			MIF 20UG 3		
Padlock plate[3]			PLD 20UG					

※ 1] For detail type information, please refer to page 195-202.
2] Motor operator is not recommended for marine application.
3] Padlock is not supplied.

• Mounting

			UCD50H, UCD100S, UCD100H		UCD160H, UCD250S, UCD250H	
Plug-in	Structure		For both line & load side	For line side only	For both line & load side	For line side only
	Mounting base		TDM 10BP	TDM 10BF	TDM 20CF[2]	TDM 20CF
	Connection block[1]	2C contact	CBM 10AB 2	–	CBM 20C 2	–
		3C/5C contact	CBM 10AB 3[3]	–	CBM 20C 5[3]	–
	Conn. block barrier		CBM BARR	–	–	–

※ 1] Connection blocks are required for internal accessory installation in both line & load side plug-in type 3P breaker.
2] 2EA are required for both line & load side plug-in type 3P breaker.
3] CBM 10AB 3: 3C, CBM 20C 5: 5C

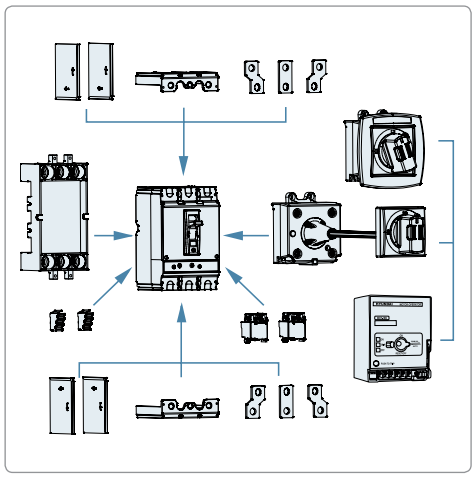

• Terminal

		UCD100S	UCD50H, UCD100H	UCD250S	UCD160H, UCD250H
Terminal bus bar		–	–	TBB 20C 3	
Cage terminal block	3EA/SET	CTB 10B 3S		CTB 20C 3S	
Terminal cover[1]		TCF 10BP 3	TCF 10FP 3	TCF 20CP 3	TCF 20GP 3
Interpole barrier[2]	2EA/SET	TQQ 10B 3PLINE	TQQ 12FG 3PLINE	TQQ 20C 3PLINE	TQQ 12FG 3PLINE

※ 1] For both line and load side of breaker, 2EA shall be ordered.
2] Supplied as standard component
Required quantity for both line and load side of breaker: 4EA

▪ Standard order code and unit

Model	Rated current	3 pole Code	Unit (EA)	Originated MCCB model	Specification	Category
UCD50H	50A	UCD50H 3PDS0000C 00050	8	UCB50H	Screw type terminal connection, No option, 50/60Hz	MCCB/M5
UCD100S	100A	UCD100S 3PDS0000C 00100	10	UCB100S		
UCD100H	125A	UCD100H 3PDS0000C 00125	8	UCB100H		
UCD160H	160A	UCD160H 3PDS0000C 00160	8	UCB160H		
UCD250S	250A	UCD250S 3PDS0000C 00250	10	UCB250S		
UCD250H	250A	UCD250H 3PDS0000C 00250	8	UCB250H		

Specifications and Standard Order Codes

| Switch disconnector / UCD type 400-1250AF |

- UCD400S
- UCD630S
- UCD800S
- UCD1000S
- UCD1250S

				UCD400S	UCD630S	UCD800S	UCD1000S	UCD1250S
								
Ampere frame size				400AF	630AF	800AF	1000AF	1250AF
Number of poles (P)				3	3	3	3	3
Degree of protection (with terminal cover)				IP20	IP20	IP20	IP20 1)	IP20 1)
Utilization category				A	A	A	A	A
Suitability of isolation				○	○	○	○	○
Rating	Conventional thermal current [Ith] (A)			400	630	800	1,000	1,250
	Rated current (A)			400	630	800	1,000	1,250
	Rated insulation voltage [Ui] (V)			AC690	AC690	AC690	AC750	AC750
	Rated operational voltage [Ue] (V)			AC660	AC660	AC660	AC690	AC690
				DC250	DC250	DC250	–	–
	Rated impulse withstand voltage [Uimp] (kV)			6	6	6	8	8
	Rated short-circuit making capacity [Icm] (kA peak at AC460V)			187	187	187	165	165
	Rated short-time withstand current for 1sec. [Icw] (kA r.m.s.)			4	6.3	8	10	12.5
Durability (times)	Mechanical operation			20,000	20,000	10,000	10,000	10,000
	Electrical operation			6,000	6,000	3,000	3,000	3,000
Mounting	Direct mounting by screw			○	○	○	–	–
	Plug-in	for Switchboard	Both line & load side	○	○	○	–	–
			Line side only	○	○	○	–	–
Terminal connection		Screw		○	○	○	–	–
		Bus bar		○	○	○	○	○
Dimensions (mm) 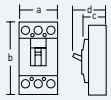		3P	a Width	140	210	210	210	210
			b Height	257	280	280	370	370
			c Depth	110	110	110	110	110
			d	145	145	145	159	159
Weight (kg, breaker only)		3P		4.5	9.5	9.5	13	13.5

※ 1) IP20 without terminal bus bar

▪ Accessories

- Signal

Auxiliary switch		1C, right-hand-side	2C, right-hand-side	3C, right-hand-side			
	UCD400, UCD630, UCD800	AUX 46D R1	–	–			
	UCD1000, UCD1250	AUX 80NE R1	AUX 80NE R2	AUX 80NE R3			
Trip alarm switch		1C, left-hand-side	1C, right-hand-side				
	UCD400, UCD630, UCD800	ALT 46D L1	–				
	UCD1000, UCD1250	–	ALT 80NE R1				
Shunt trip 1)		DC24V	DC100-110V	AC100-120V	AC200-230V	AC380-415V	AC440-480V
	UCD400, UCD630, UCD800	SHT 46D A	SHT 46D C	SHT 46D F	SHT 46D H	SHT 46D B	SHT 46D D
	UCD1000, UCD1250	SHT 120NE A	SHT 120NE C	SHT 120NE F	SHT 120NE H	SHT 120NE B	SHT 120NE D
Under voltage trip 2)		DC24V	DC100-110V	AC100-120V	AC200-230V	AC380-415V	AC440-480V
	UCD400, UCD630,UCD800	*UVT 46D J	*UVT 46D L	*UVT 46D N	*UVT 46D P	*UVT 46D Q	*UVT 46D R
	UCD1000, UCD1250	UVT 120NE J	UVT 120NE L	UVT 120NE N	UVT 120NE P	UVT 120NE Q	UVT 120NE R

※ 1) The permissible operating voltage: 85-110% of rated voltage for AC , 75-125% for DC
2) The permissible operating voltage: 85-110% of rated voltage(AC), 85-125% of rated voltage(DC)
The tripping voltage: 20-70% of rated voltage(AC/DC)
Be sure not to use UVT for the electrical interlock system.
*Reset is possible without power.

• Operating

			UCD400, UCD630, UCD800		
Operating handle[1]	Power supply direction		Upper	Right	Left
	Surface	S type	TFG 46DS U4	TFG 46DS R4	TFG 46DS L4
	Extended	S type	TFH 46DS		

	UCD400			UCD630, UCD800			UCD1000, UCD1250		
Motor operator[2]	DC24V	AC/DC110V	AC/DC220V	DC24V	AC/DC110V	AC/DC220V	DC24V	AC/DC110V	AC/DC220V
	MOT 40D DC24	MOT 40D ADC110	MOT 40D ADC220	MOT 68E DC24	MOT 68E ADC110	MOT 68E ADC220	MOT 80NE DC24	MOT 80NE ADC110	MOT 80NE ADC220
Mechanical interlock	MIF 40D 3			MIF 80E 3			–		
Padlock plate[3]	PLD 40D						PLD 120NE		
Extension handle[4]	THA 46D						THA 120NE		

※ 1] For detail type information, please refer to page 195-202.
2] Motor operator is not recommended for marine application.
3] Padlock is not supplied.
4] Supplied as standard component.

• Mounting

			UCD400		UCD630, UCD800	
Plug-in	Structure		For both line & load side	For line side only	For both line & load side	For line side only
	Mounting base		TDM 4BA[2]	TDM 4BA	TDM 5BA[2]	TDM 5BA
	Connection block[1]	2C contact	TYA 5/2[3]	–	TYA 5/2[3]	–
		5C contact	TYA 5/5[3]	–	TYA 5/5[3]	–

※ 1] Connection blocks are required for internal accessory installation in both line & load side plug-in type 3P breaker.
2] 2EA are required for both line & load side plug-in type 3P breaker.
3] TYA type connection blocks are to be installed with separate mounting angle. Separate mounting angle is not supplied.

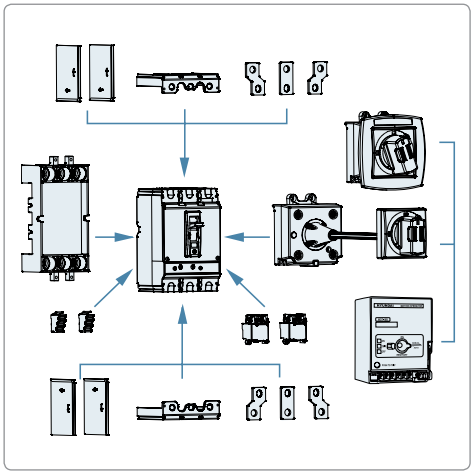

• Terminal

		UCD400	UCD630	UCD800	UCD1000, UCD1250
Terminal bus bar		TBB 4S 3	TBB 6S 3	TBB 8S 3	–
Cage terminal block	3EA/SET	CTB 40D 3S	CTB 80E 3S		–
Terminal cover[1]		TCF 40D 3	TCF 80E 3		–
Interpole barrier[2]	2EA/SET	TQQ 4BA 3PLINE	TQQ 5BA 3PLINE		TQQ 80NE 3P

※ 1] For both line and load side of breaker, 2EA shall be ordered.
2] Supplied as standard component
Required quantity for both line and load side of breaker: 4EA

▪ Standard order code and unit

Model	Rated current	3 pole Code	Unit (EA)	Originated MCCB model	Specification	Category
UCD400S	400A	UCD400S 3PDS0000C 00400	3	UCB400S	Screw type terminal connection, No option, 50/60Hz	MCCB/M5
UCD630S	630A	UCD630S 3PDS0000C 00630	2	UCB630S		
UCD800S	800A	UCD800S 3PDS0000C 00800	2	UCB800S		
UCD1000S	1000A	UCD1000S 3PDB0000C 01000	1	UCB1000S	Bus bar type terminal connection, No option, 50/60Hz	
UCD1250S	1250A	UCD1250S 3PDB0000C 01250	1	UCB1250S		

Specifications and Standard Order Codes

| Switch disconnector / UPD type 125-630AF |

- UPD100S
- UPD160S
- UPD250S
- UPD400S
- UPD630S

				UPD100S	UPD160S	UPD250S	UPD400S	UPD630S
								
Ampere frame size				125AF	160AF	250AF	400AF	630AF
Number of poles (P)				3	3	3	3	3
Degree of protection (with terminal cover)				IP20	IP20	IP20	IP20	IP20
Utilization category				A	A	A	A	A
Suitability of isolation				○	○	○	○	○
Rating	Conventional thermal current [Ith] (A)			125	160	250	400	630
	Rated current (A)			125	160	250	400	630
	Rated insulation voltage [Ui] (V)			AC750	AC750	AC750	AC750	AC750
	Rated operational voltage [Ue] (V)			AC690	AC690	AC690	AC690	AC690
				DC500	DC500	DC500	–	–
	Rated impulse withstand voltage [Uimp] (kV)			8	8	8	8	8
	Rated short-circuit making capacity [Icm] (kA peak at AC460V)			200	200	200	200	200
	Rated short-time withstand current for 1sec. [Icw] (kA r.m.s)			1	1.6	2.5	4	6.3
Durability (times)	Mechanical operation			25,000	25,000	25,000	20,000	20,000
	Electrical operation			10,000	10,000	10,000	6,000	6,000
Mounting	Direct mounting by screw			○	○	○	○	○
	Plug-in	for Switchboard	Both line & load side	○	○	○	○	○
			Line side only	○	○	○	○	○
Terminal connection		Screw		○	○	○	○	○
		Bus bar		○	○	○	○	○
Dimensions (mm)	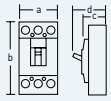	3P	a Width	105	105	105	140	140
			b Height	165	165	165	255	255
			c Depth	86.5	86.5	86.5	117	117
			d	112	112	112	159.5	159.5
Weight (kg, breaker only)		3P		1.8	2	2	6	6

▪ Accessories

- Signal

Auxiliary switch		1C, right-hand-side	1C, left-hand-side
	UPD100, UPD160, UPD250	AUX 12UP R1	–
	UPD400, UPD630	–	AUX 46UP L1
Trip alarm switch		1C, right-hand-side	1C, left-hand-side
	UPD100, UPD160, UPD250	–	ALT 12UP L1
	UPD400, UPD630	ALT 46UP R1	–

Shunt trip [1]	DC24V	DC100-110V	AC100-120V	AC200-230V	AC380-415V	AC440-480V
UPD100, UPD160, UPD250	SHT 12UP A	SHT 12UP C	SHT 12UP F	SHT 12UP H	SHT 12UP B	SHT 12UP D
UPD400, UPD630	SHT 46UP A	SHT 46UP C	SHT 46UP F	SHT 46UP H	SHT 46UP B	SHT 46UP D
Under voltage trip [2]	DC24V	DC100-110V	AC100-120V	AC200-230V	AC380-415V	AC440-480V
UPD100, UPD160, UPD250	*UVT 12UP J	*UVT 12UP L	*UVT 12UP N	*UVT 12UP P	*UVT 12UP Q	*UVT 12UP R
UPD400, UPD630	*UVT 46UP J	*UVT 46UP L	*UVT 46UP N	*UVT 46UP P	*UVT 46UP Q	*UVT 46UP R

※ 1] The permissible operating voltage: 85-110% of rated voltage for AC , 75-125% for DC
2] The permissible operating voltage: 85-110% of rated voltage(AC), 85-125% of rated voltage(DC)
The tripping voltage: 20-70% of rated voltage(AC/DC)
Be sure not to use UVT for the electrical interlock system.
*Reset is possible without power.

• Operating

			UPD100, UPD160, UPD250			UPD400, UPD630		
Operating handle[1]	Power supply direction		Upper	Right	Left	Upper	Right	Left
	Surface	S type	TFG 12UPS U4	TFG 12UPS R4	TFG 12UPS L4	TFG 46UPS U4	TFG 46UPS R4	TFG 46UPS L4
		L type	TFG 12UPL U4	–	TFG 12UPL L4	–	–	–
	Extended	S type	TFH 12UPS			TFH 46UPS		
		L type	TFH 12UPL			–		
Motor operator[2]			DC24V	AC/DC110V	AC/DC220V	DC24V	AC/DC110V	AC/DC220V
			MOT 12UP DC24	MOT 12UP ADC110	MOT 12UP ADC220	MOT 46NE DC24	MOT 46NE ADC110	MOT 46NE ADC220
Mechanical interlock			MIF 12UP 3			MIF 46UP 3		
Padlock plate[3]			PLD 12UP			PLD 12UP		
Extension handle[4]			–			THA 46UP		

※ 1] For detail type information, please refer to page 195-202.
2] Motor operator is not recommended for marine application.
3] Padlock is not supplied.
4] Supplied as standard component.

• Mounting

			UPD100, UPD160, UPD250		UPD400, UPD630	
Plug-in	Structure		For both line & load side	For line side only	For both line & load side	For line side only
	Mounting base		TDM 12NEP	TDM 12NEF	TDM 46NEP	TDM 46NEF
	Connection block[1]	6C contact	CBM 26NE 6	–	CBM 26NE 6	–
		12C contact	CBM 26NE 6[2]	–	CBM 26NE 6[2]	–

※ 1] Connection blocks are required for internal accessory installation in both line & load side plug-in type 3P breaker.
2] 2EA shall be ordered for 12C contact.

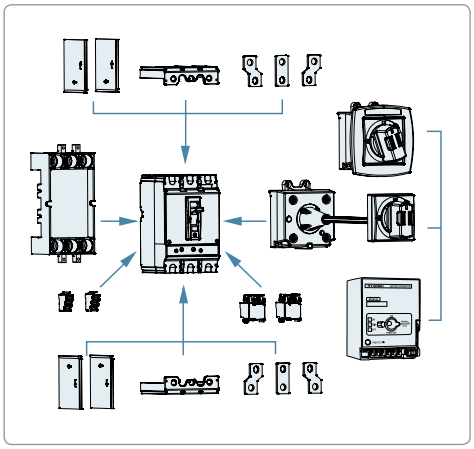

• Terminal

		UPD100, UPD160, UPD250	UPD400	UPD630
Terminal bus bar	6EA/SET	TBB 12NE 3	TBB 40NE 3	TBB 60NE 3
Cage terminal block	3EA/SET	CTB 12UP 3S	CTB 46UP 3S	
Terminal cover[1]		TCF 12UP 3	TCF 46UP 3	
Interpole barrier[2]	4EA/SET	TQQ 12NE 3P	TQQ 46NE 3P	

※ 1] For both line and load side of breaker, 2EA shall be ordered.
2] Supplied as standard component
Required quantity for both line and load side of breaker: 4EA

▪ Standard order code and unit

Model	Rated current	3 pole		Originated MCCB model	Specification	Category
		Code	Unit (EA)			
UPD100S	125A	UPD100S 3PDS0000C 00125	8	UPB100S	Screw type terminal connection, No option, 50/60Hz	MCCB/M5
UPD160S	160A	UPD160S 3PDS0000C 00160	8	UPB160S		
UPD250S	250A	UPD250S 3PDS0000C 00250	8	UPB250S		
UPD400S	400A	UPD400S 3PDS0000C 00400	3	UPB400S		
UPD630S	630A	UPD630S 3PDS0000C 00630	3	UPB630S		

Specifications and Standard Order Codes

| Miniature type / Molded case circuit breaker UMB type 30-50AF |

- UMB30Ra 2.5kA
- UMB30Rb 2.5kA
- UMB30Sg 5kA
- UMB30Hg 10kA
- UMB50Sg 5kA
- UMB50Hg 10kA

			UMB30Ra	UMB30Rb	UMB30Sg	UMB30Hg	UMB50Sg	UMB50Hg
								
Ampere frame size			30AF				50AF	
Number of poles (P)			2				2	
Degree of protection			IP20				IP20	
Utilization category			A				A	
Protection			overload, short-circuit				overload, short-circuit	
Rating	Rated current (A)		15, 20, 30				15, 20, 30, 40, 50	
	Rated insulation voltage [Ui] (V)		AC250				AC250	
	Rated operational voltage [Ue] (V)		AC220				AC220	
	Rated impulse withstand voltage [Uimp] (kV)		6				6	
Rated short-circuit breaking capacity IEC 60947-2 K 60947-2	Ultimate [Icu] (kA r.m.s.)	AC220/240V, 50-60Hz	2.5		5	10	5	10
	Service [Ics]	% of [Icu]	50				50	
Trip mechanism	Hydraulic magnetic		–	–	–	○	–	○
	Thermal magnetic		○	○	○	–	○	–
Mounting		Direct mounting by screw	○				○	
		DIN-rail	–		○		○	
Terminal connection		Screw	○				○	
Dimensions (mm) 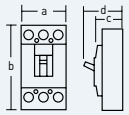	2P	a Width	33		35		35	
		b Height	70		80		80	
		c Depth	42	60	60		60	
		d	57	75	76		76	
Weight (kg, breaker only)	2P		0.1	0.12	0.13		0.15	

※ - KS certified products. English nameplate and 50Hz marking are not available.
- The breaking capacity highlighted with blue and thick type is standard nominal value for each model in this catalogue.

▪ Standard order code and unit

40/45℃

Model / Breaking capacity at AC220/240V	Rated current	2 pole Code	Specification	Category
UMB30Ra 2.5kA	15A	UMB30RA 2PT4S0000C 00015	Screw type terminal connection, No option, 50/60Hz	MCCB/M1
	20A	UMB30RA 2PT4S0000C 00020		
	30A	UMB30RA 2PT4S0000C 00030		
UMB30Rb 2.5kA	15A	UMB30RB 2PT4S0000C 00015		
	20A	UMB30RB 2PT4S0000C 00020		
	30A	UMB30RB 2PT4S0000C 00030		
UMB30Sg 2.5kA	15A	UMB30SG 2PT4S0000C 00015		
	20A	UMB30SG 2PT4S0000C 00020		
	30A	UMB30SG 2PT4S0000C 00030		
UMB30Hg 2.5kA	15A	UMB30HG 2PT4S0000C 00015		
	20A	UMB30HG 2PT4S0000C 00020		
	30A	UMB30HG 2PT4S0000C 00030		
UMB50Sg 5kA	15A	UMB50SG 2PT4S0000C 00015		
	20A	UMB50SG 2PT4S0000C 00020		
	30A	UMB50SG 2PT4S0000C 00030		
	40A	UMB50SG 2PT4S0000C 00040		
	50A	UMB50SG 2PT4S0000C 00050		
UMB50Hg 10kA	15A	UMB50HG 2PT4S0000C 00015		
	20A	UMB50HG 2PT4S0000C 00020		
	30A	UMB50HG 2PT4S0000C 00030		
	40A	UMB50HG 2PT4S0000C 00040		
	50A	UMB50HG 2PT4S0000C 00050		

| Miniature type / Molded case circuit breaker UDB type 30-100AF |

- UDB30S 5kA
- UDB50S 5kA
- UDB100S 5kA
- UDB30H 10kA
- UDB50H 10kA
- UDB100H 10kA



			UDB30S	UDB30H	UDB50S	UDB50H	UDB100S	UDB100H
Ampere frame size			30AF		50AF		100AF	
Number of poles (P)			2, 3		2, 3		*2, 3	
Degree of protection			IP20		IP20		IP20	
Utilization category			A		A		A	
Protection			overload, short-circuit		overload, short-circuit		overload, short-circuit	
Rating	Rated current (A)		3[1], 5, 10, 15, 20, 30		5, 10, 15, 20, 30, 40, 50		15, 20, 30, 40, 50, 60, 75, 100	
	Rated insulation voltage [Ui] (V)		AC460		AC460		AC460	
	Rated operational voltage [Ue] (V)		2P: AC220 3P: AC220/460		2P: AC220 3P: AC220/460		2P: AC220 3P: AC220/460	
	Rated impulse withstand voltage [Uimp] (kV)		6		6		6	
Rated short-circuit breaking capacity IEC 60947-2 K 60947-2	Ultimate [Icu] (kA r.m.s.)	AC440/460V, 50-60Hz	2.5	5-10A: 2.5 15-30A: 5	2.5	5-10A: 2.5 15-50A: 5	2.5	5
		AC380/415V, 50-60Hz	2.5	5-10A: 2.5 15-30A: 5	2.5	5-10A: 2.5 15-50A: 5	2.5	5
		AC220/240V, 50-60Hz	5	5-10A: 5 15-30A: 10	5	5-10A: 5 15-50A: 10	5	10
	Service [Ics]	% of [Icu]	50		50		50	
Trip mechanism	Hydraulic magnetic		○		○		○	
Mounting		Direct mounting by screw	○		○		○	
		DIN-rail	○		○		○	
Terminal connection		Screw	○		○		○	
Dimensions (mm) 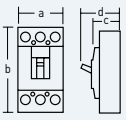	2/3P	a Width	50/75		50/75		75[2] /75	
		b Height	96		96		96	
		c Depth	60		60		60	
		d	80		80		80	
Weight (kg, breaker only)	2/3P		0.2/0.35		0.2/0.35		0.2/0.35	

※ - KS certified products. English nameplate and 50Hz marking are not available.
- The breaking capacity highlighted with blue and thick type is standard nominal value for each model in this catalogue.
1] 3A is not applicable for UDB30H.
2] *2P breaker has same dimension as 3P breaker, but the middle pole is removed.

▪ Accessories

• Signal

Auxiliary switch	1C, left-hand-side		AUX 10UD L1	AUX 10UD L1T[2]			
Trip alarm switch	1C, left-hand-side	2 pole	ALT 10UD 2L1	ALT 10UD 2L1T[2]			
		3 pole	ALT 10UD 3L1	ALT 10UD 3L1T[2]			
Shunt trip[1]			DC24V	DC100-110V	AC100-120V	AC200-230V	AC380-415V	AC440-480V
			SHT 10UD A	SHT 10UD C	SHT 10UD F	SHT 10UD H	SHT 10UD B	SHT 10UD D
			SHT 10UD AT[2]	SHT 10UD CT[2]	SHT 10UD FT[2]	SHT 10UD HT[2]	SHT 10UD BT[2]	SHT 10UD DT[2]

※ 1] The permissible operating voltage: 85-110% of rated voltage for AC , 75-125% for DC
2] Terminal block type

• Terminal

Interpole barrier[1]	2EA/SET	TQQ 10A 3PLINE

※ 1] Supplied as standard component
Required quantity for both line and load side of breaker: 2 pole 2EA, 3 pole 4EA

Specifications and Standard Order Codes

▪ Standard order code and unit

40/45℃

Model / Breaking capacity at AC220/240V	Rated current	2 pole		3 pole		Specification	Category
		Code	Unit (EA)	Code	Unit (EA)		
UDB30S 5kA	3A	UDB30S 2PT4S0000C 00003	46	UDB30S 3PT4S0000C 00003	32	Screw type terminal connection, No option, 50/60Hz	MCCB /M1
	5A	UDB30S 2PT4S0000C 00005	46	UDB30S 3PT4S0000C 00005	32		
	10A	UDB30S 2PT4S0000C 00010	46	UDB30S 3PT4S0000C 00010	32		
	15A	UDB30S 2PT4S0000C 00015	46	UDB30S 3PT4S0000C 00015	32		
	20A	UDB30S 2PT4S0000C 00020	46	UDB30S 3PT4S0000C 00020	32		
	30A	UDB30S 2PT4S0000C 00030	46	UDB30S 3PT4S0000C 00030	32		
UDB30H 5-10A : 5kA 15-30A : 10kA	5A	UDB30H 2PT4S0000C 00005	46	UDB30H 3PT4S0000C 00005	32		
	10A	UDB30H 2PT4S0000C 00010	46	UDB30H 3PT4S0000C 00010	32		
	15A	UDB30H 2PT4S0000C 00015	46	UDB30H 3PT4S0000C 00015	32		
	20A	UDB30H 2PT4S0000C 00020	46	UDB30H 3PT4S0000C 00020	32		
	30A	UDB30H 2PT4S0000C 00030	46	UDB30H 3PT4S0000C 00030	32		
UDB50S 5kA	5A	UDB50S 2PT4S0000C 00005	46	UDB50S 3PT4S0000C 00005	32		
	10A	UDB50S 2PT4S0000C 00010	46	UDB50S 3PT4S0000C 00010	32		
	15A	UDB50S 2PT4S0000C 00015	46	UDB50S 3PT4S0000C 00015	32		
	20A	UDB50S 2PT4S0000C 00020	46	UDB50S 3PT4S0000C 00020	32		
	30A	UDB50S 2PT4S0000C 00030	46	UDB50S 3PT4S0000C 00030	32		
	40A	UDB50S 2PT4S0000C 00040	46	UDB50S 3PT4S0000C 00040	32		
	50A	UDB50S 2PT4S0000C 00050	46	UDB50S 3PT4S0000C 00050	32		
UDB50H 5-10A : 5kA 15-50A : 10kA	5A	UDB50H 2PT4S0000C 00005	46	UDB50H 3PT4S0000C 00005	32		
	10A	UDB50H 2PT4S0000C 00010	46	UDB50H 3PT4S0000C 00010	32		
	15A	UDB50H 2PT4S0000C 00015	46	UDB50H 3PT4S0000C 00015	32		
	20A	UDB50H 2PT4S0000C 00020	46	UDB50H 3PT4S0000C 00020	32		
	30A	UDB50H 2PT4S0000C 00030	46	UDB50H 3PT4S0000C 00030	32		
	40A	UDB50H 2PT4S0000C 00040	46	UDB50H 3PT4S0000C 00040	32		
	50A	UDB50H 2PT4S0000C 00050	46	UDB50H 3PT4S0000C 00050	32		
UDB100S 5kA	15A	UDB100S 2PT4S0000C 00015	32	UDB100S 3PT4S0000C 00015	32		
	20A	UDB100S 2PT4S0000C 00020	32	UDB100S 3PT4S0000C 00020	32		
	30A	UDB100S 2PT4S0000C 00030	32	UDB100S 3PT4S0000C 00030	32		
	40A	UDB100S 2PT4S0000C 00040	32	UDB100S 3PT4S0000C 00040	32		
	50A	UDB100S 2PT4S0000C 00050	32	UDB100S 3PT4S0000C 00050	32		
	60A	UDB100S 2PT4S0000C 00060	32	UDB100S 3PT4S0000C 00060	32		
	75A	UDB100S 2PT4S0000C 00075	32	UDB100S 3PT4S0000C 00075	32		
	100A	UDB100S 2PT4S0000C 00100	32	UDB100S 3PT4S0000C 00100	32		
UDB100H 10kA	15A	UDB100H 2PT4S0000C 00015	32	UDB100H 3PT4S0000C 00015	32		
	20A	UDB100H 2PT4S0000C 00020	32	UDB100H 3PT4S0000C 00020	32		
	30A	UDB100H 2PT4S0000C 00030	32	UDB100H 3PT4S0000C 00030	32		
	40A	UDB100H 2PT4S0000C 00040	32	UDB100H 3PT4S0000C 00040	32		
	50A	UDB100H 2PT4S0000C 00050	32	UDB100H 3PT4S0000C 00050	32		
	60A	UDB100H 2PT4S0000C 00060	32	UDB100H 3PT4S0000C 00060	32		
	75A	UDB100H 2PT4S0000C 00075	32	UDB100H 3PT4S0000C 00075	32		
	100A	UDB100H 2PT4S0000C 00100	32	UDB100H 3PT4S0000C 00100	32		

| Miniature type / Earth leakage circuit breaker UMG type 30-50AF |

- UMG30Ca 1.5kA
- UMG30Cb 1.5kA
- UMG30Ra 2.5kA
- UMG30Rb 2.5kA
- UMG30Cd 1.5kA
- UMG30Rd 2.5kA
- UMG30Sg 5kA
- UMG30Hg 10kA
- UMG50Sg 5kA
- UMG50Hg 10kA



				UMG30Ca	UMG30Cb	UMG30Ra	UMG30Rb	UMG30Cd	UMG30Rd	UMG30Sg	UMG30Hg	UMG50Sg	UMG50Hg
Ampere frame size				30AF				30AF		30AF		50AF	
Number of poles (P)				2				2		2		2	
Degree of protection				IP20				IP20		IP20		IP20	
Utilization category				A				A		A		A	
Protection				earth leakage, overload, short-circuit				earth leakage, overload, short-circuit		earth leakage, overload, short-circuit		earth leakage, overload, short-circuit	
Rating	Rated current (A)			15, 20, 30				15, 20, 30		15, 20, 30		15, 20, 30, 40, 50	
	Rated residual current [I△n] (mA)			15, 30				15, 30		15, 30		15, 30	
	Rated insulation voltage [Ui] (V)			AC250				AC250		AC250		AC250	
	Rated operational voltage [Ue] (V)			AC220				AC220		AC220		AC220	
	Rated impulse withstand voltage [Uimp] (kV)			6				6		6		6	
	Rated operating time (sec.)			0.03				0.03		0.03		0.03	
Rated short-circuit breaking capacity IEC 60947-2 K 60947-2	Ultimate [Icu] (kA r.m.s.)	AC220/240V, 50-60Hz		1.5		2.5		1.5	2.5	5	10	5	10
	Service [Ics]	% of [Icu]		50				50		50		50	
Earth leakage protection	Earth leakage detection			by current transformer				by current transformer		by current transformer		by current transformer	
	Earth leakage test button			○		○		○		○		○	
Trip mechanism	Hydraulic magnetic			–		–		–		–	○	–	○
	Thermal magnetic			○		○		○		○	–	○	–
Mounting	Direct mounting by screw			–		–		○		–		–	
	DIN-rail			○		○		–		○		○	
Terminal connection	Screw			○		○		○		○		○	
Dimensions (mm) 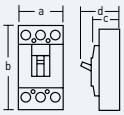	2P	a	Width	33		33		62		35		35	
		b	Height	70		70		82		80		80	
		c	Depth	42	60	42	60	42		60		60	
		d		57	76	57	76	58		76		76	
Weight (kg, breaker only)	2P			0.1	0.12	0.1	0.12	0.21		0.13	0.15	0.13	0.15

※ - KS certified products. English nameplate and 50Hz marking are not available.
- The breaking capacity highlighted with blue and thick type is standard nominal value for each model in this catalogue.

Specifications and Standard Order Codes

▪ Standard order code and unit

15mA

Model / Breaking capacity at AC220/240V	Rated current	2 pole		Specification	Category
		Code	Unit(EA)		
UMG30R 2.5kA	15A	UMG30R 2PG3S0000C 00015	150	15mA, 40/45℃, Screw type terminal connection, No option, 50/60Hz	ELCB/M6
	20A	UMG30R 2PG3S0000C 00020	150		
	30A	UMG30R 2PG3S0000C 00030	150		
UMG30S 5kA	15A	UMG30S 2PG3S0000C 00015	80		
	20A	UMG30S 2PG3S0000C 00020	80		
	30A	UMG30S 2PG3S0000C 00030	80		
UMG30H 10kA	15A	UMG30H 2PG3S0000C 00015	80		
	20A	UMG30H 2PG3S0000C 00020	80		
	30A	UMG30H 2PG3S0000C 00030	80		
UMG50S 5kA	15A	UMG50S 2PG3S0000C 00015	80		
	20A	UMG50S 2PG3S0000C 00020	80		
	30A	UMG50S 2PG3S0000C 00030	80		
	40A	UMG50S 2PG3S0000C 00040	80		
	50A	UMG50S 2PG3S0000C 00050	80		
UMG50H 10kA	15A	UMG50H 2PG3S0000C 00015	80		
	20A	UMG50H 2PG3S0000C 00020	80		
	30A	UMG50H 2PG3S0000C 00030	80		
	40A	UMG50H 2PG3S0000C 00040	80		
	50A	UMG50H 2PG3S0000C 00050	80		

30mA

Model / Breaking capacity at AC220/240V	Rated current	2 pole		Specification	Category
		Code	Unit(EA)		
UMG30R 2.5kA	15A	UMG30R 2PG4S0000C 00015	150	30mA, 40/45℃, Screw type terminal connection, No option, 50/60Hz	ELCB/M6
	20A	UMG30R 2PG4S0000C 00020	150		
	30A	UMG30R 2PG4S0000C 00030	150		
UMG30S 5kA	15A	UMG30S 2PG4S0000C 00015	80		
	20A	UMG30S 2PG4S0000C 00020	80		
	30A	UMG30S 2PG4S0000C 00030	80		
UMG30H 10kA	15A	UMG30H 2PG4S0000C 00015	80		
	20A	UMG30H 2PG4S0000C 00020	80		
	30A	UMG30H 2PG4S0000C 00030	80		
UMG50S 5kA	15A	UMG50S 2PG4S0000C 00015	80		
	20A	UMG50S 2PG4S0000C 00020	80		
	30A	UMG50S 2PG4S0000C 00030	80		
	40A	UMG50S 2PG4S0000C 00040	80		
	50A	UMG50S 2PG4S0000C 00050	80		
UMG50H 10kA	15A	UMG50H 2PG4S0000C 00015	80		
	20A	UMG50H 2PG4S0000C 00020	80		
	30A	UMG50H 2PG4S0000C 00030	80		
	40A	UMG50H 2PG4S0000C 00040	80		
	50A	UMG50H 2PG4S0000C 00050	80		

| Miniature type / Earth leakage circuit breaker UDG type 30-100AF |

- UDG30S 5kA
- UDG50S 5kA
- UDG100S 5kA
- UDG30H 10kA
- UDG50H 10kA
- UDG100H 10kA



Ampere frame size			30AF		50AF		100AF	
Number of poles (P)			2, 3		2, 3		*2, 3	
Degree of protection			IP20		IP20		IP20	
Utilization category			A		A		A	
Protection			earth leakage, overload, short-circuit		earth leakage, overload, short-circuit		earth leakage, overload, short-circuit	
Rating	Rated current (A)		3[1], 5, 10, 15, 20, 30		5, 10, 15, 20, 30, 40, 50		15, 20, 30, 40, 50, 60, 75, 100	
	Rated residual current [I△n] (mA)		15, 30		15, 30		30, 100	
	Rated insulation voltage [Ui] (V)		AC460		AC460		AC460	
	Rated operational voltage [Ue] (V)		2P: AC220 3P: AC220/460		2P: AC220 3P: AC220/460		2P: AC220 3P: AC220/460	
	Rated impulse withstand voltage [Uimp] (kV)		6		6		6	
	Rated operating time (sec.)		0.03		0.03		0.03	
Rated short-circuit breaking capacity IEC 60947-2 K 60947-2	Ultimate [Icu] (kA r.m.s.)	AC440/460V, 50-60Hz	2.5	5-10A: 2.5 15-30A: 5	2.5	5-10A: 2.5 15-50A: 5	2.5	5
		AC380/415V, 50-60Hz	2.5	5-10A: 2.5 15-30A: 5	2.5	5-10A: 2.5 15-50A: 5	2.5	5
		AC220/240V, 50-60Hz	5	5-10A: 5 15-30A: 10	5	5-10A: 5 15-50A: 10	5	10
	Service [Ics]	% of [Icu]	50		50		50	
Earth leakage protection	Earth leakage detection		by current transformer		by current transformer		by current transformer	
	Earth leakage test button		○		○		○	
	Earth leakage indicator		○		○		○	
Trip mechanism	Hydraulic magnetic		○		○		○	
Mounting	Direct mounting by screw		○		○		○	
	DIN-rail		○		○		○	
Terminal connection	Screw		○		○		○	
Dimensions (mm) 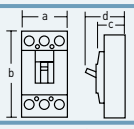	2/3P	a Width	50/75		50/75		75[2]/75	
		b Height	96		96		96	
		c Depth	60		60		60	
		d	80		80		80	
Weight (kg, breaker only)	2/3P		0.33/0.44		0.33/0.44		0.46/0.63	

※ - KS certified products. English nameplate and 50Hz marking are not available.
- The breaking capacity highlighted with blue and thick type is standard nominal value for each model in this catalogue.
1] 3A is not applicable for UDG30H.
2] *2P breaker has same dimension as 3P breaker, but the middle pole is removed.

▪ Accessories

• Signal

Auxiliary switch	1C, left-hand-side		AUX 10UD L1
Trip alarm switch	1C, left-hand-side	2 pole	ALT 10UD 2L1
		3 pole	ALT 10UD 3L1

• Terminal

Interpole barrier[1]	2EA/SET	TQQ 10A 3PLINE

※ 1] Supplied as standard component
Required quantity for both line and load side of breaker: 2 pole 2EA, 3 pole 4EA

Specifications and Standard Order Codes

▪ Standard order code and unit

15mA

Model / Breaking capacity at AC220/240V	Rated current	2 pole		3 pole		Specification	Category
		Code	Unit (EA)	Code	Unit (EA)		
UDG30S 5kA	3A	UDG30S 2PG3S0000C 00003	46	UDG30S 3PG3S0000C 00003	32	15mA, 40/45℃, Screw type terminal connection, No option, 50/60Hz	ELCB /M6
	5A	UDG30S 2PG3S0000C 00005	46	UDG30S 3PG3S0000C 00005	32		
	10A	UDG30S 2PG3S0000C 00010	46	UDG30S 3PG3S0000C 00010	32		
	15A	UDG30S 2PG3S0000C 00015	46	UDG30S 3PG3S0000C 00015	32		
	20A	UDG30S 2PG3S0000C 00020	46	UDG30S 3PG3S0000C 00020	32		
	30A	UDG30S 2PG3S0000C 00030	46	UDG30S 3PG3S0000C 00030	32		
UDG30H 5-10A : 5kA 15-30A : 10kA	5A	UDG30H 2PG3S0000C 00005	46	UDG30H 3PG3S0000C 00005	32		
	10A	UDG30H 2PG3S0000C 00010	46	UDG30H 3PG3S0000C 00010	32		
	15A	UDG30H 2PG3S0000C 00015	46	UDG30H 3PG3S0000C 00015	32		
	20A	UDG30H 2PG3S0000C 00020	46	UDG30H 3PG3S0000C 00020	32		
	30A	UDG30H 2PG3S0000C 00030	46	UDG30H 3PG3S0000C 00030	32		
UDG50S 5kA	5A	UDG50S 2PG3S0000C 00005	46	UDG50S 3PG3S0000C 00005	32		
	10A	UDG50S 2PG3S0000C 00010	46	UDG50S 3PG3S0000C 00010	32		
	15A	UDG50S 2PG3S0000C 00015	46	UDG50S 3PG3S0000C 00015	32		
	20A	UDG50S 2PG3S0000C 00020	46	UDG50S 3PG3S0000C 00020	32		
	30A	UDG50S 2PG3S0000C 00030	46	UDG50S 3PG3S0000C 00030	32		
	40A	UDG50S 2PG3S0000C 00040	46	UDG50S 3PG3S0000C 00040	32		
	50A	UDG50S 2PG3S0000C 00050	46	UDG50S 3PG3S0000C 00050	32		
UDG50H 5-10A : 5kA 15-50A : 10kA	5A	UDG50H 2PG3S0000C 00005	46	UDG50H 3PG3S0000C 00005	32		
	10A	UDG50H 2PG3S0000C 00010	46	UDG50H 3PG3S0000C 00010	32		
	15A	UDG50H 2PG3S0000C 00015	46	UDG50H 3PG3S0000C 00015	32		
	20A	UDG50H 2PG3S0000C 00020	46	UDG50H 3PG3S0000C 00020	32		
	30A	UDG50H 2PG3S0000C 00030	46	UDG50H 3PG3S0000C 00030	32		
	40A	UDG50H 2PG3S0000C 00040	46	UDG50H 3PG3S0000C 00040	32		
	50A	UDG50H 2PG3S0000C 00050	46	UDG50H 3PG3S0000C 00050	32		

30mA

Model / Breaking capacity at AC220/240V	Rated current	2 pole		3 pole		Specification	Category
		Code	Unit (EA)	Code	Unit (EA)		
UDG30S 5kA	3A	UDG30S 2PG4S0000C 00003	46	UDG30S 3PG4S0000C 00003	32	30mA, 40/45℃, Screw type terminal connection, No option, 50/60Hz	ELCB /M6
	5A	UDG30S 2PG4S0000C 00005	46	UDG30S 3PG4S0000C 00005	32		
	10A	UDG30S 2PG4S0000C 00010	46	UDG30S 3PG4S0000C 00010	32		
	15A	UDG30S 2PG4S0000C 00015	46	UDG30S 3PG4S0000C 00015	32		
	20A	UDG30S 2PG4S0000C 00020	46	UDG30S 3PG4S0000C 00020	32		
	30A	UDG30S 2PG4S0000C 00030	46	UDG30S 3PG4S0000C 00030	32		
UDG30H 5-10A : 5kA 15-30A : 10kA	5A	UDG30H 2PG4S0000C 00005	46	UDG30H 3PG4S0000C 00005	32		
	10A	UDG30H 2PG4S0000C 00010	46	UDG30H 3PG4S0000C 00010	32		
	15A	UDG30H 2PG4S0000C 00015	46	UDG30H 3PG4S0000C 00015	32		
	20A	UDG30H 2PG4S0000C 00020	46	UDG30H 3PG4S0000C 00020	32		
	30A	UDG30H 2PG4S0000C 00030	46	UDG30H 3PG4S0000C 00030	32		
UDG50S 5kA	5A	UDG50S 2PG4S0000C 00005	46	UDG50S 3PG4S0000C 00005	32		
	10A	UDG50S 2PG4S0000C 00010	46	UDG50S 3PG4S0000C 00010	32		
	15A	UDG50S 2PG4S0000C 00015	46	UDG50S 3PG4S0000C 00015	32		
	20A	UDG50S 2PG4S0000C 00020	46	UDG50S 3PG4S0000C 00020	32		
	30A	UDG50S 2PG4S0000C 00030	46	UDG50S 3PG4S0000C 00030	32		
	40A	UDG50S 2PG4S0000C 00040	46	UDG50S 3PG4S0000C 00040	32		
	50A	UDG50S 2PG4S0000C 00050	46	UDG50S 3PG4S0000C 00050	32		

Model / Breaking capacity at AC220/240V	Rated current	2 pole		3 pole		Specification	Category
		Code	Unit (EA)	Code	Unit (EA)		
UDG50H 5-10A : 5kA 15-50A : 10kA	5A	UDG50H 2PG4S0000C 00005	46	UDG50H 3PG4S0000C 00005	32	30mA, 40/45℃, Screw type terminal connection, No option, 50/60Hz	ELCB /M6
	10A	UDG50H 2PG4S0000C 00010	46	UDG50H 3PG4S0000C 00010	32		
	15A	UDG50H 2PG4S0000C 00015	46	UDG50H 3PG4S0000C 00015	32		
	20A	UDG50H 2PG4S0000C 00020	46	UDG50H 3PG4S0000C 00020	32		
	30A	UDG50H 2PG4S0000C 00030	46	UDG50H 3PG4S0000C 00030	32		
	40A	UDG50H 2PG4S0000C 00040	46	UDG50H 3PG4S0000C 00040	32		
	50A	UDG50H 2PG4S0000C 00050	46	UDG50H 3PG4S0000C 00050	32		
UDG100S 5kA	15A	UDG100S 2PG4S0000C 00015	32	UDG100S 3PG4S0000C 00015	32		
	20A	UDG100S 2PG4S0000C 00020	32	UDG100S 3PG4S0000C 00020	32		
	30A	UDG100S 2PG4S0000C 00030	32	UDG100S 3PG4S0000C 00030	32		
	40A	UDG100S 2PG4S0000C 00040	32	UDG100S 3PG4S0000C 00040	32		
	50A	UDG100S 2PG4S0000C 00050	32	UDG100S 3PG4S0000C 00050	32		
	60A	UDG100S 2PG4S0000C 00060	32	UDG100S 3PG4S0000C 00060	32		
	75A	UDG100S 2PG4S0000C 00075	32	UDG100S 3PG4S0000C 00075	32		
	100A	UDG100S 2PG4S0000C 00100	32	UDG100S 3PG4S0000C 00100	32		
UDG100H 10kA	15A	UDG100H 2PG4S0000C 00015	32	UDG100H 3PG4S0000C 00015	32		
	20A	UDG100H 2PG4S0000C 00020	32	UDG100H 3PG4S0000C 00020	32		
	30A	UDG100H 2PG4S0000C 00030	32	UDG100H 3PG4S0000C 00030	32		
	40A	UDG100H 2PG4S0000C 00040	32	UDG100H 3PG4S0000C 00040	32		
	50A	UDG100H 2PG4S0000C 00050	32	UDG100H 3PG4S0000C 00050	32		
	60A	UDG100H 2PG4S0000C 00060	32	UDG100H 3PG4S0000C 00060	32		
	75A	UDG100H 2PG4S0000C 00075	32	UDG100H 3PG4S0000C 00075	32		
	100A	UDG100H 2PG4S0000C 00100	32	UDG100H 3PG4S0000C 00100	32		

100mA

Model / Breaking capacity at AC220/240V	Rated current	2 pole		3 pole		Specification	Category
		Code	Unit (EA)	Code	Unit (EA)		
UDG100S 5kA	15A	UDG100S 2PG5S0000C 00015	32	UDG100S 3PG5S0000C 00015	32	100mA, 40/45℃, Screw type terminal connection, No option, 50/60Hz	ELCB /M6
	20A	UDG100S 2PG5S0000C 00020	32	UDG100S 3PG5S0000C 00020	32		
	30A	UDG100S 2PG5S0000C 00030	32	UDG100S 3PG5S0000C 00030	32		
	40A	UDG100S 2PG5S0000C 00040	32	UDG100S 3PG5S0000C 00040	32		
	50A	UDG100S 2PG5S0000C 00050	32	UDG100S 3PG5S0000C 00050	32		
	60A	UDG100S 2PG5S0000C 00060	32	UDG100S 3PG5S0000C 00060	32		
	75A	UDG100S 2PG5S0000C 00075	32	UDG100S 3PG5S0000C 00075	32		
	100A	UDG100S 2PG5S0000C 00100	32	UDG100S 3PG5S0000C 00100	32		
UDG100H 10kA	15A	UDG100H 2PG5S0000C 00015	32	UDG100H 3PG5S0000C 00015	32		
	20A	UDG100H 2PG5S0000C 00020	32	UDG100H 3PG5S0000C 00020	32		
	30A	UDG100H 2PG5S0000C 00030	32	UDG100H 3PG5S0000C 00030	32		
	40A	UDG100H 2PG5S0000C 00040	32	UDG100H 3PG5S0000C 00040	32		
	50A	UDG100H 2PG5S0000C 00050	32	UDG100H 3PG5S0000C 00050	32		
	60A	UDG100H 2PG5S0000C 00060	32	UDG100H 3PG5S0000C 00060	32		
	75A	UDG100H 2PG5S0000C 00075	32	UDG100H 3PG5S0000C 00075	32		
	100A	UDG100H 2PG5S0000C 00100	32	UDG100H 3PG5S0000C 00100	32		

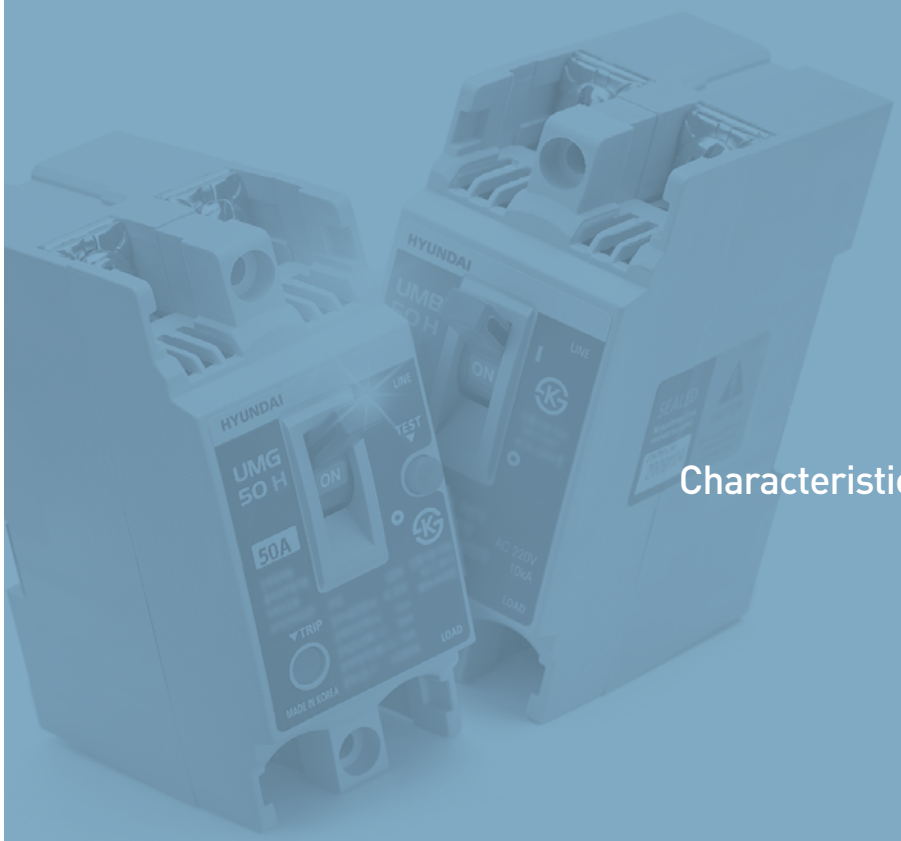

Characteristic Curves & Dimensions

Characteristic Curves & Dimensions

| UAB type / 30-100AF, 5-10kA |



- UAB30C • UAB30R
- UAB50C • UAB50R
- UAB60C • UAB60R
- UAB100C

- UAD50C

※Characteristic curves are not applicable.

Tripping & temperature derating curves

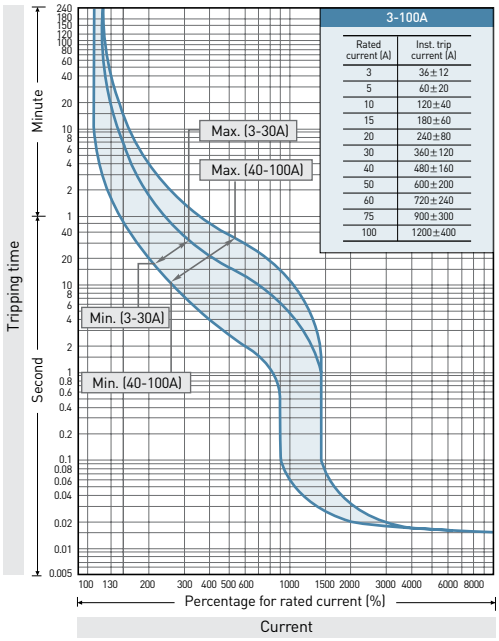

3-100A

Rated current (A)	Inst. trip current (A)
3	36±12
5	60±20
10	120±40
15	180±60
20	240±80
30	360±120
40	480±160
50	600±200
60	720±240
75	900±300
100	1200±400

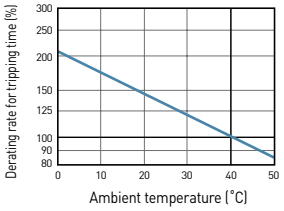

Dimensions

※ ℄ : Center line ⊬ : Handle center line • The allowance of 1.5mm is given around the handle frame. (Unit: mm)

Direct mounting

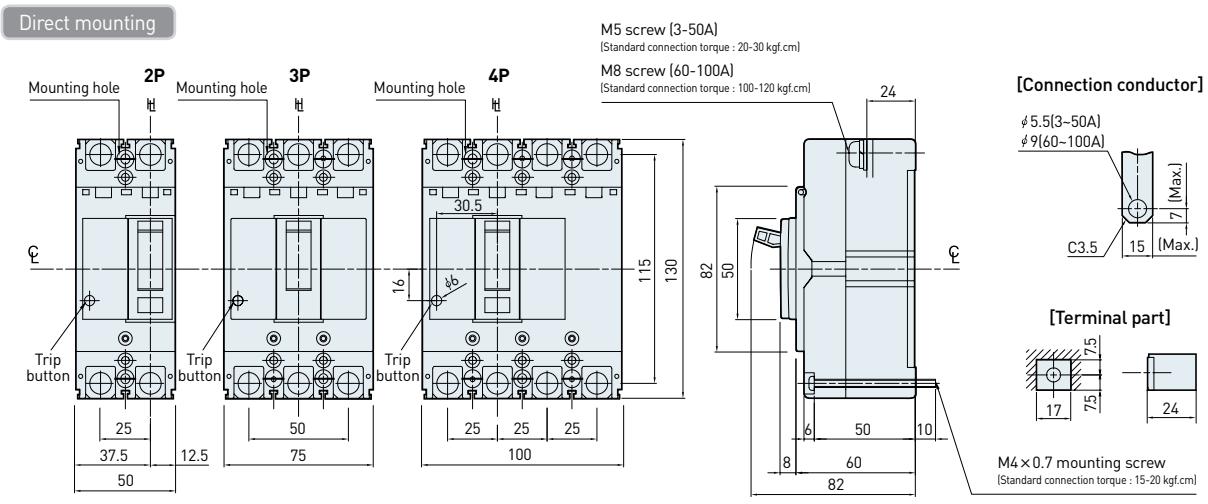

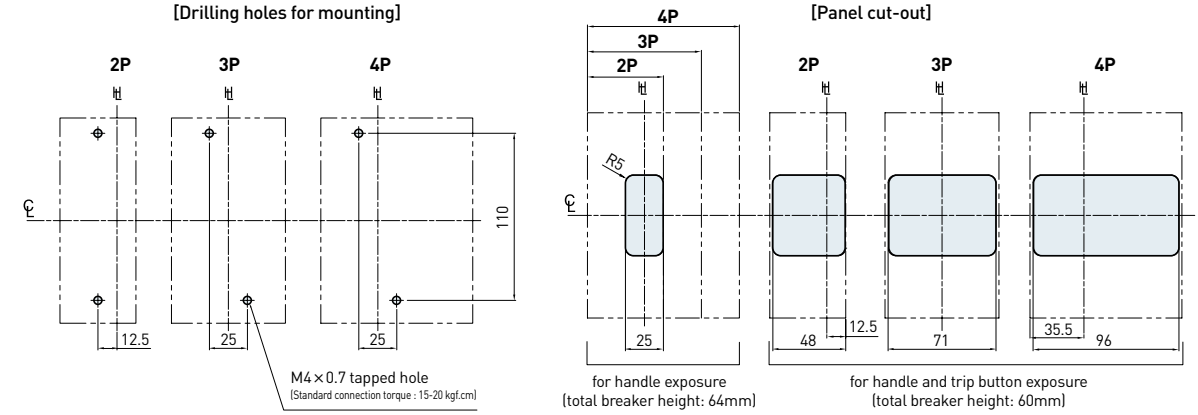

Dimensions

※ ℄ : Center line ⊢ : Handle center line • The allowance of 1.5mm is given around the handle frame. (Unit: mm)

Plug-in mounting

[Plug-in connection part]

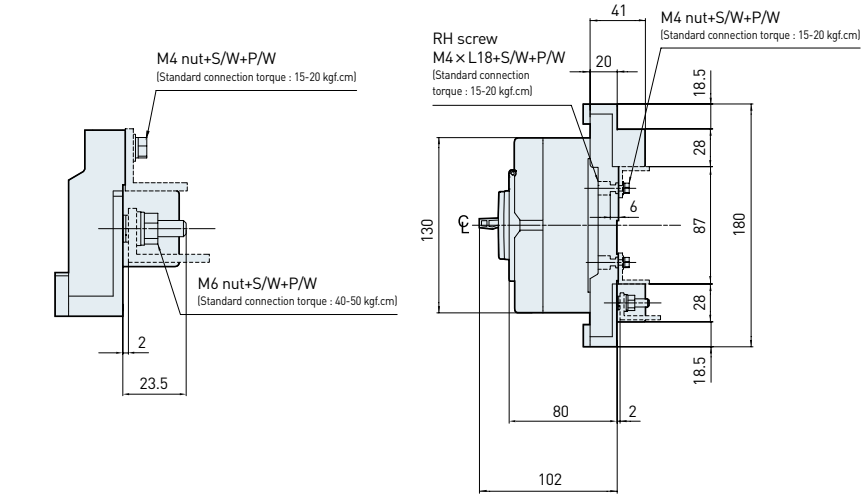

[Mounting base]

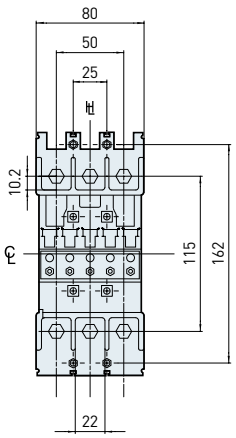

[Panel cut-out]

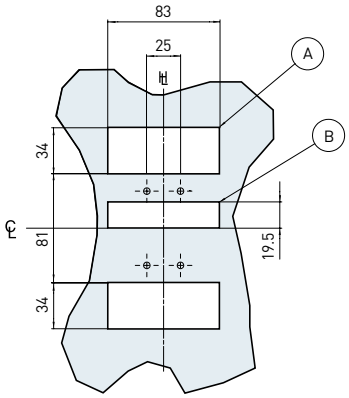

[Drilling holes for mounting]

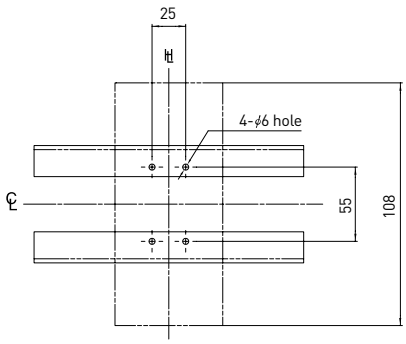

[Connection conductor]

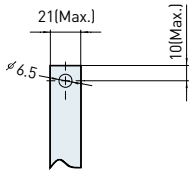

Ⓐ : Cut-out before bus bar assembly.
Ⓑ : Cut-out for wiring of signal accessories.

※TDF 10A for line side only type plug-in mounting, please refer to page 210.

Installation of signal accessories

No. of poles	AUX Auxiliary switch	ALT Trip alarm switch	SHT Shunt trip	UVT Under voltage trip	AUX ALT	AUX SHT	AUX UVT	ALT SHT	ALT UVT	AXT SHT	AXT UVT
3	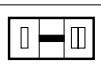		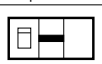	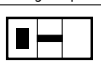	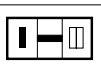	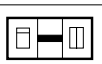	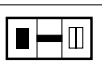	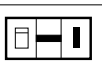		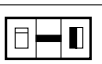	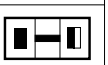

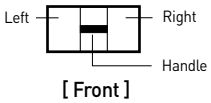

[Front]

※ - AXT is combintaion of AUX and ALT.
- In case of 2P, all signal accessories shall be installed in left side of breaker.
- UVT operates at DC voltage. AC voltage will be converted to DC through UVT controller.

Characteristic Curves & Dimensions

| UAB type / 50-100AF, 25-30kA |



- UAB50S
- UAB50H
- UAB100R
- UAB100S

- UAD50S
- UAD100R

※Characteristic curves are not applicable.

Tripping & temperature derating curves

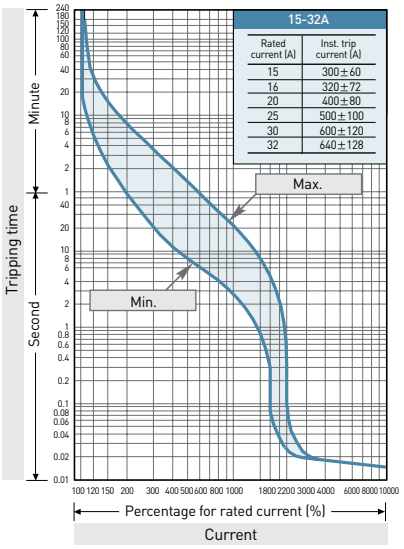

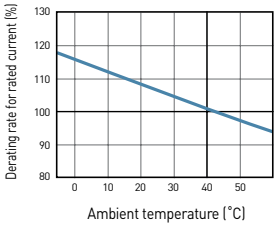

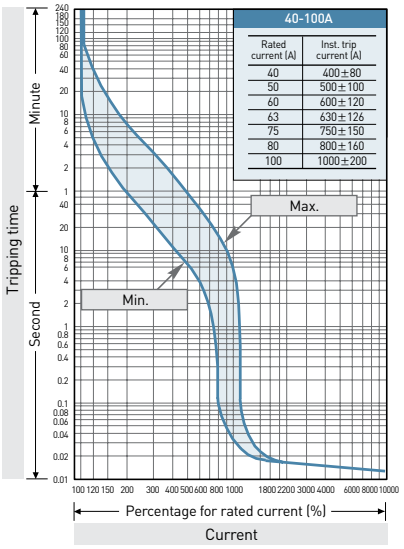

Installation of signal accessories

No. of poles	AUX Auxiliary switch	ALT Trip alarm switch	SHT Shunt trip	UVT Under voltage trip	AUX / ALT	AUX / SHT	AUX / UVT	ALT / SHT	ALT / UVT	AXT / SHT	AXT / UVT
3			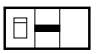								

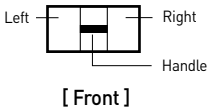

※ - AXT is combintaion of AUX and ALT.
- In case of 2P, all signal accessories shall be installed in left side of breaker.
- UVT operates at DC voltage. AC voltage will be converted to DC through UVT controller.

Dimensions

※ ℄ : Center line ⊬ : Handle center line • The allowance of 1.5mm is given around the handle frame. (Unit: mm)

Direct mounting

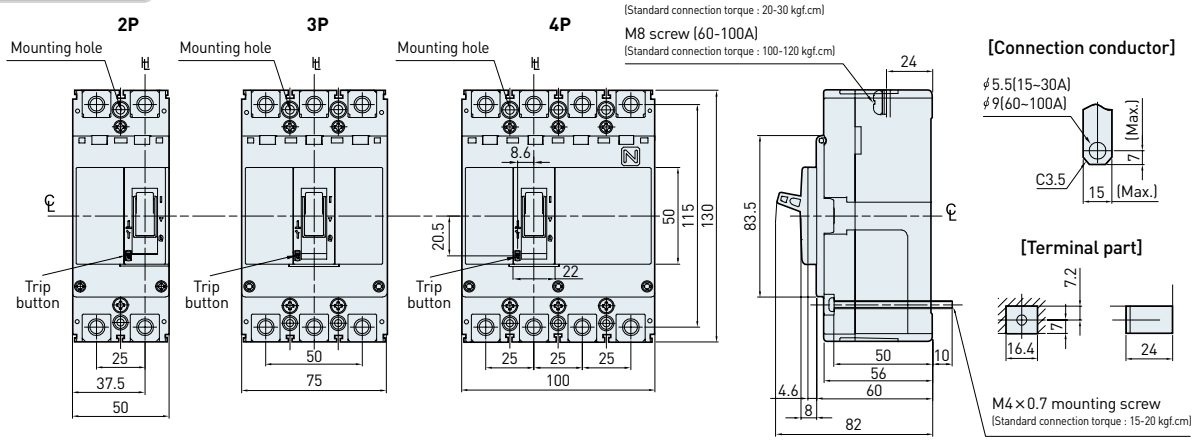

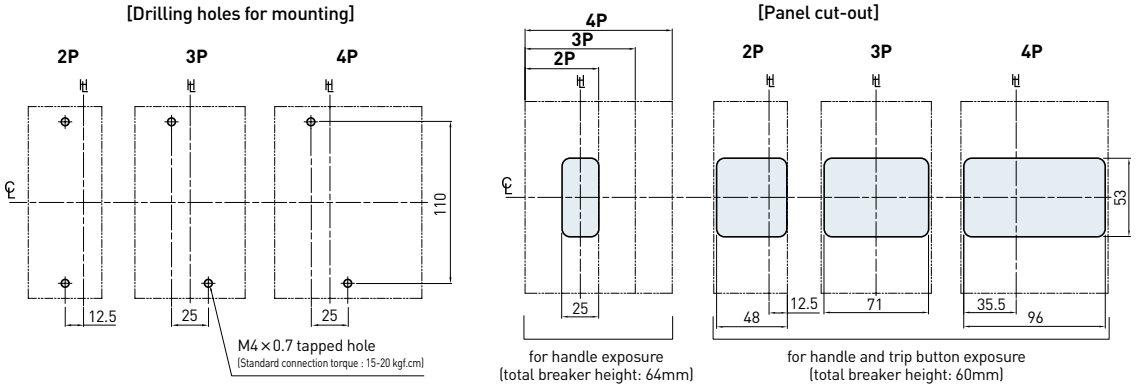

Plug-in mounting

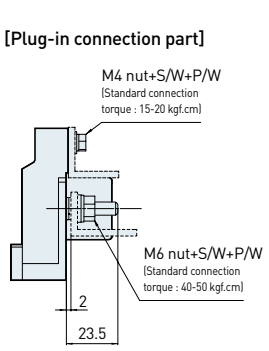

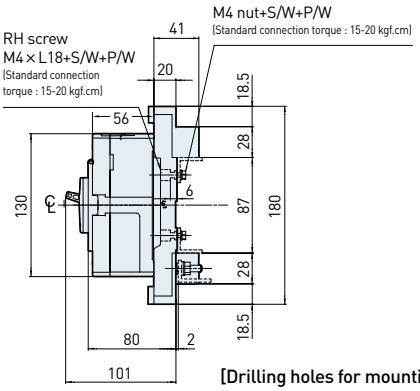

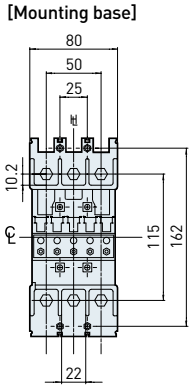

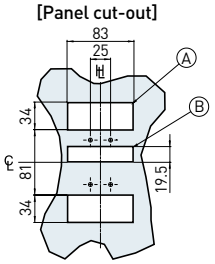

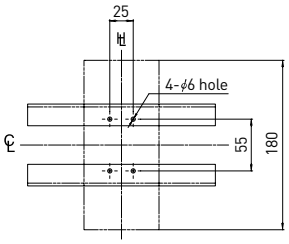

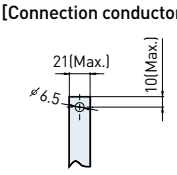

Ⓐ : Cut-out before bus bar assembly.
Ⓑ : Cut-out for wiring of signal accessories.

※ TDF 10A for line side only type plug-in mounting, please refer to page 210.

Characteristic Curves & Dimensions

| UCB type / 50-100AF, 25-36kA |



- UCB50R
- UCB100R
- UCB100S

- UCD100S

※Characteristic curves are not applicable.

Tripping & temperature derating curves

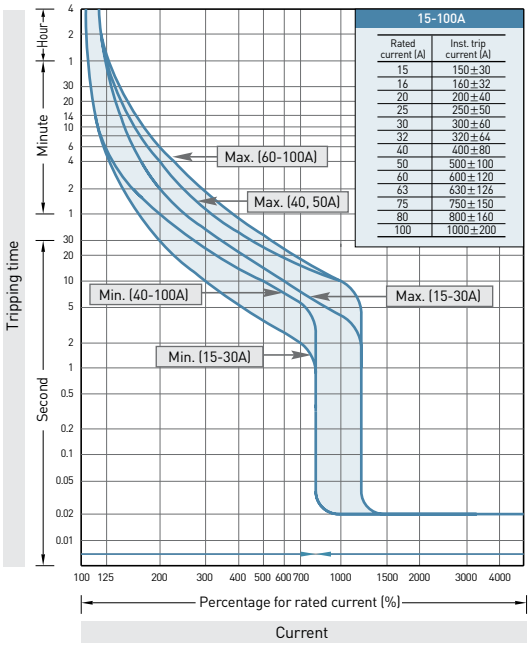

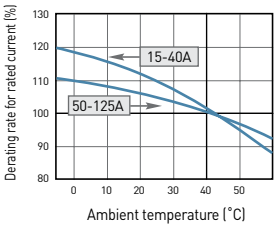

Dimensions

※ ℄ : Center line ⊢ : Handle center line • The allowance of 1.5mm is given around the handle frame. (Unit: mm)

Direct mounting

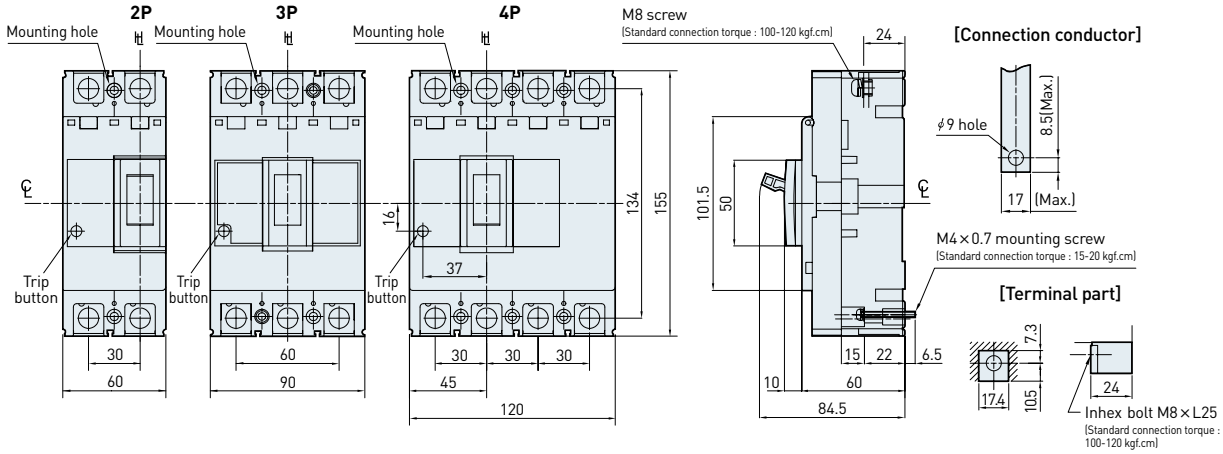

[Drilling holes for mounting]

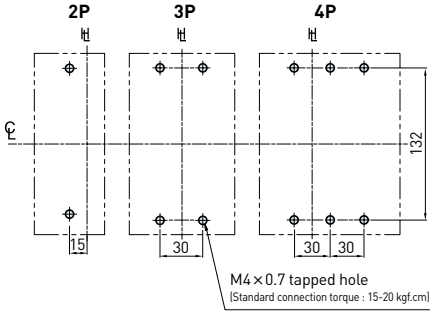

[Panel cut-out]

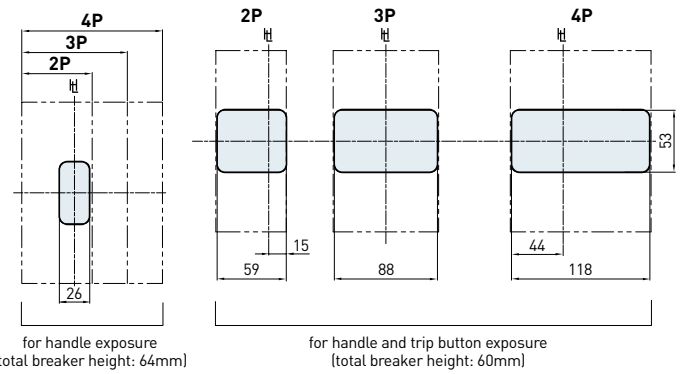

Dimensions

※ ℄ : Center line ⊬ : Handle center line • The allowance of 1.5mm is given around the handle frame. (Unit: mm)

Plug-in mounting

[Plug-in connection part]

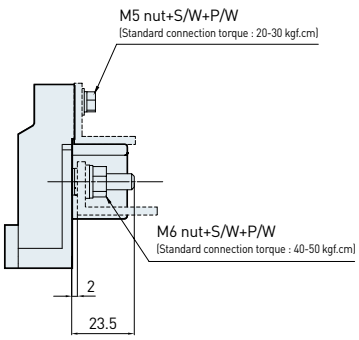

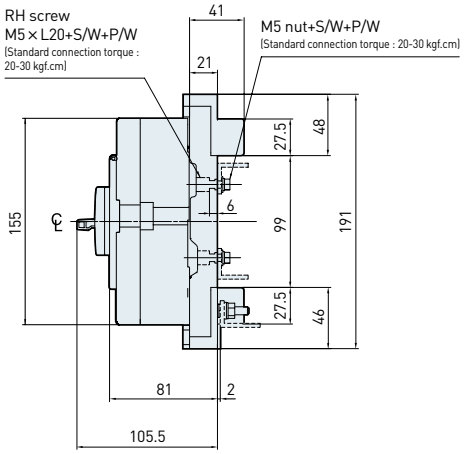

[Mounting base]

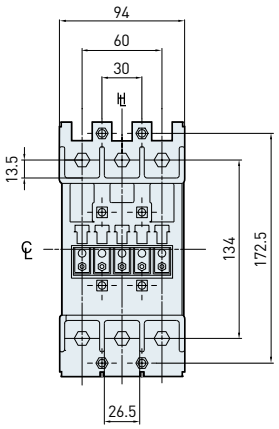

[Panel cut-out]

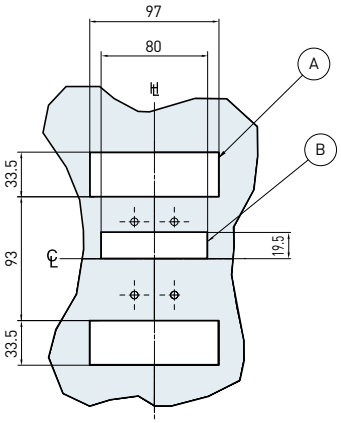

[Drilling holes for mounting]

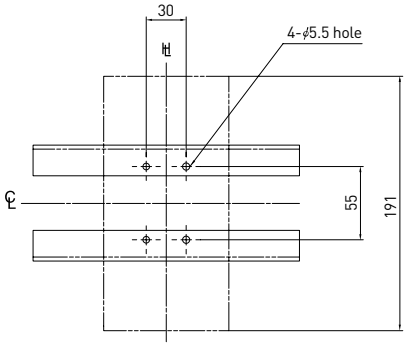

[Connection conductor]

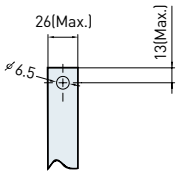

Ⓐ : Cut-out before bus bar assembly.
Ⓑ : Cut-out for wiring of signal accessories.

※ TDF 10B for line side only type plug-in mounting, please refer to page 210.

Installation of signal accessories

No. of poles	AUX Auxiliary switch	ALT Trip alarm switch	SHT Shunt trip	UVT Under voltage trip	AXT	AUX SHT	AUX UVT	ALT SHT	ALT UVT	AXT SHT	AXT UVT
3											

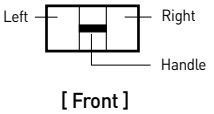

[Front]

※ - AXT is combintaion of AUX and ALT.
- In case of 2P, all signal accessories shall be installed in left side of breaker. SHT and UVT are not applicable to 2P.
- UVT operates at DC voltage. AC voltage will be converted to DC through UVT controller.

Characteristic Curves & Dimensions

| UCB type / 50-125AF, 42-50kA |



- UCB50H
- UCB50L
- UCB100H
- UCB100L

- UCD50H
- UCD100H

※Characteristic curves are not applicable.

Tripping & temperature derating curves

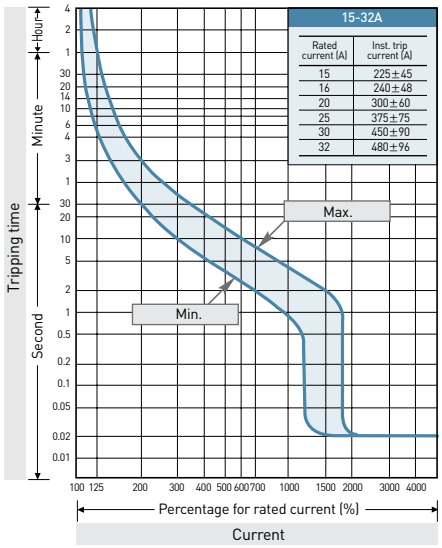

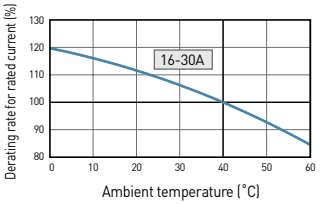

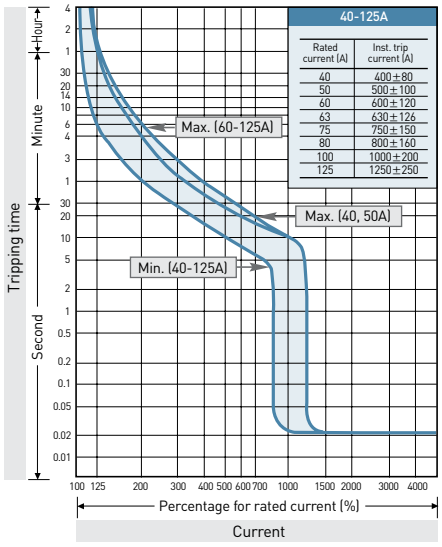

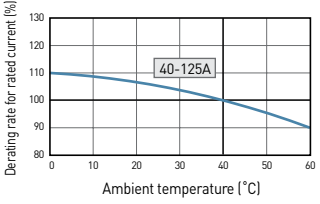

Installation of signal accessories

No. of poles	AUX Auxiliary switch	ALT Trip alarm switch	SHT Shunt trip	UVT Under voltage trip	AXT	AUX + ALT	AUX + SHT	AUX + UVT	ALT + SHT	ALT + UVT	AXT + SHT	AXT + UVT
3												

Left — Right
Handle
[Front]

※- AXT is combintaion of AUX and ALT.
- UVT operates at DC voltage. AC voltage will be converted to DC through UVT controller.

Dimensions

※ ℄ : Center line ⊬ : Handle center line • The allowance of 1.5mm is given around the handle frame. (Unit: mm)

Direct mounting

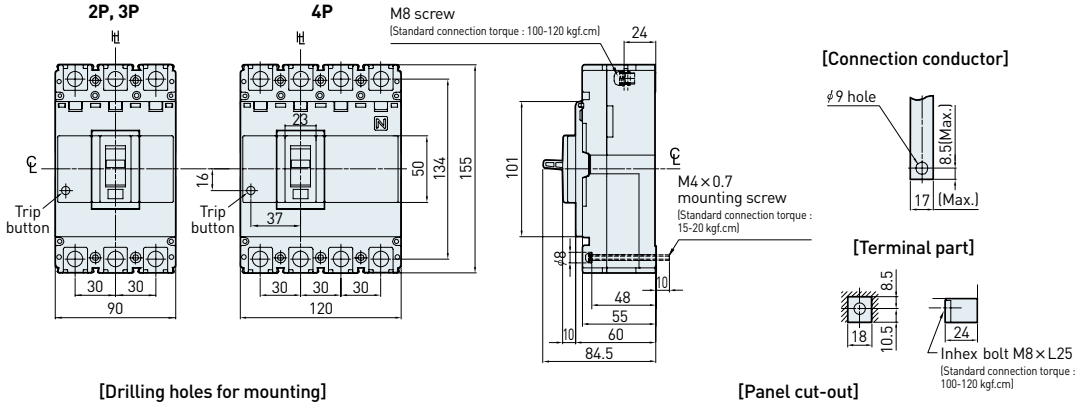

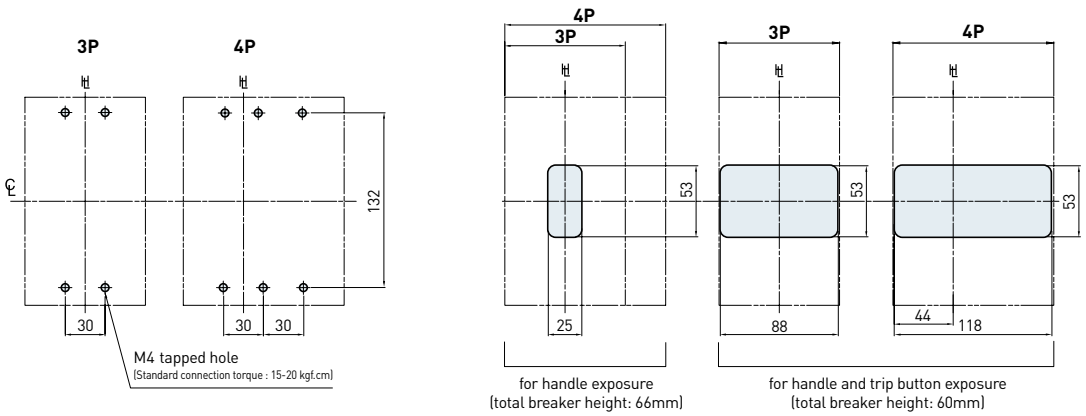

Plug-in mounting

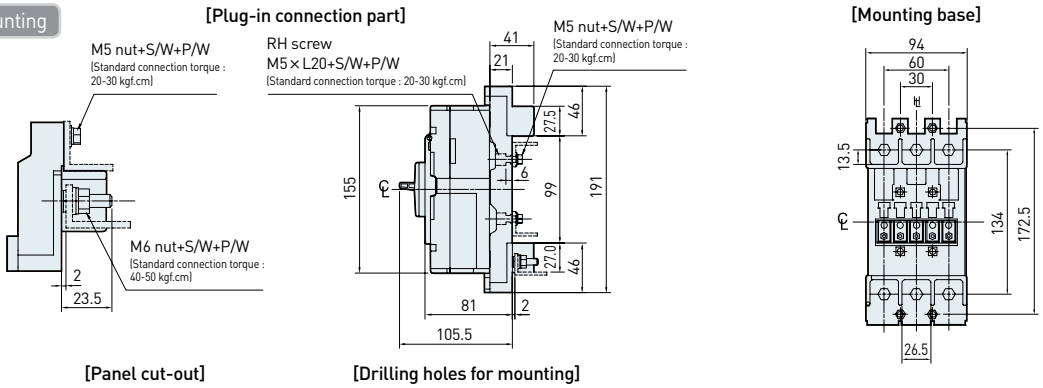

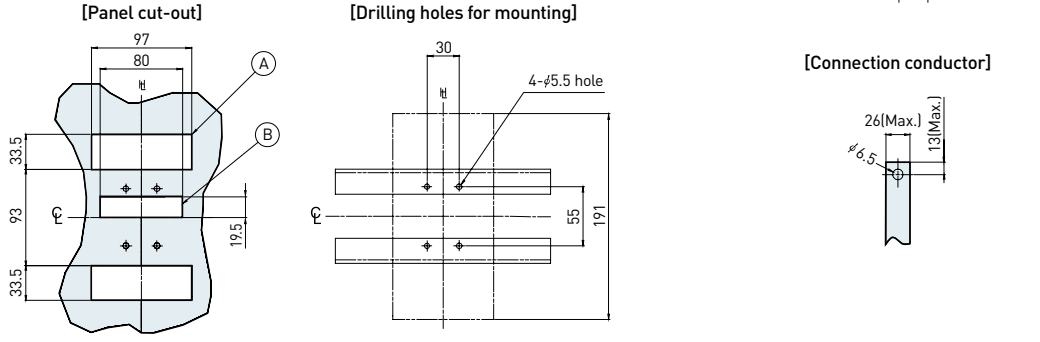

Ⓐ : Cut-out before bus bar assembly.
Ⓑ : Cut-out for wiring of signal accessories.

※TDF 10B for line side only type plug-in mounting, please refer to page 210.

Characteristic Curves & Dimensions

| UCB type / 250AF, 18-36kA |



- UCB250R
- UCB250S
- UCB250N

- UCD250S

※Characteristic curves are not applicable.

Tripping & temperature derating curves

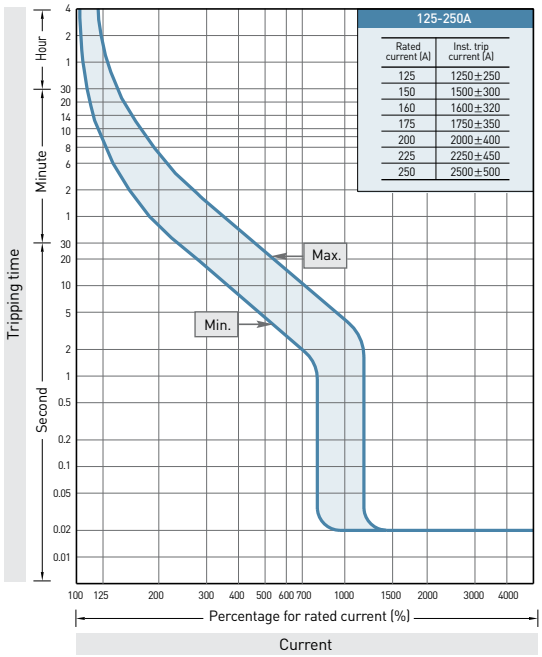

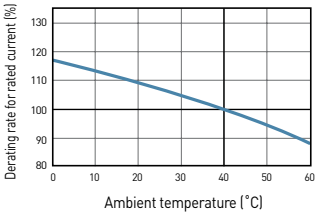

Dimensions

※ ℄ : Center line ⊬ : Handle center line • The allowance of 1.5mm is given around the handle frame. (Unit: mm)

Direct mounting

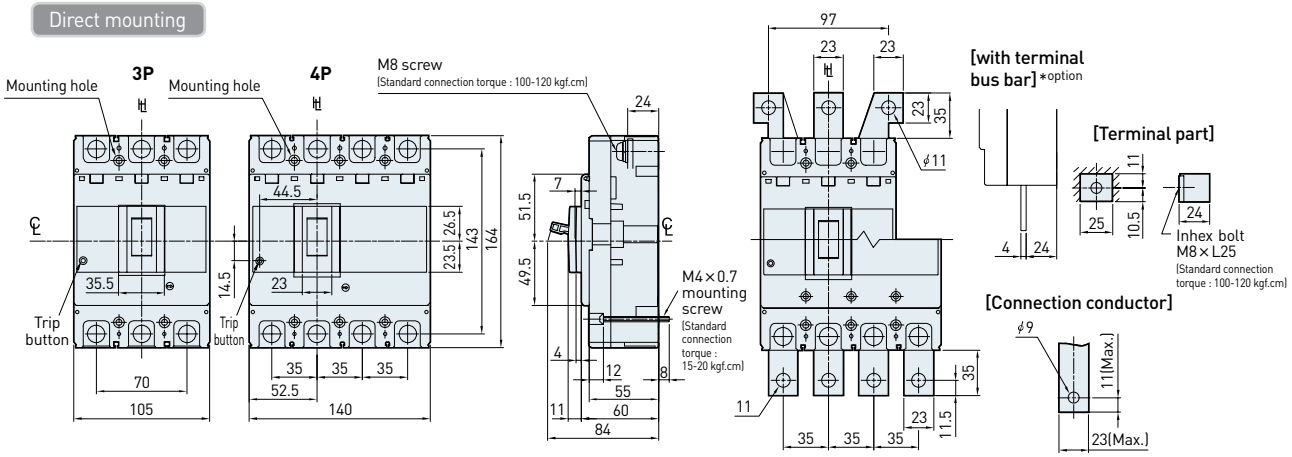

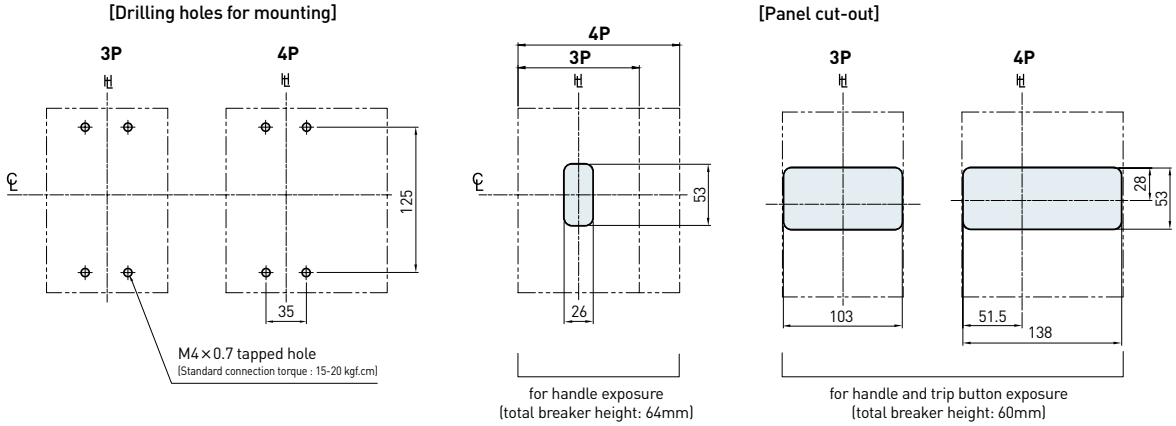

Dimensions

※ ℄ : Center line ㅐ : Handle center line • The allowance of 1.5mm is given around the handle frame. (Unit: mm)

Plug-in mounting

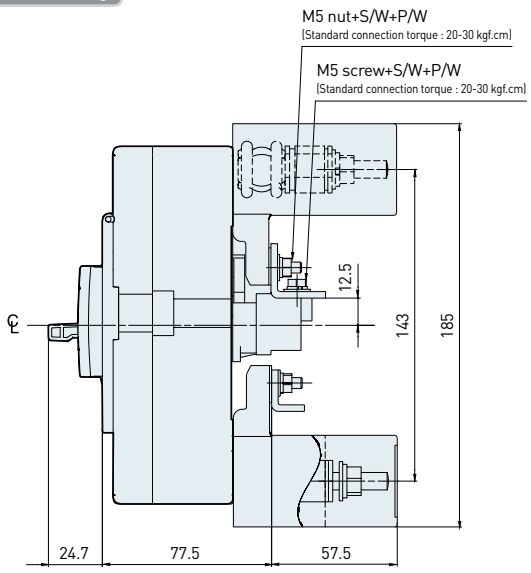

[Mounting base]

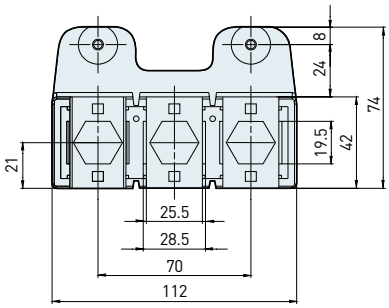

[Plug-in connection part]

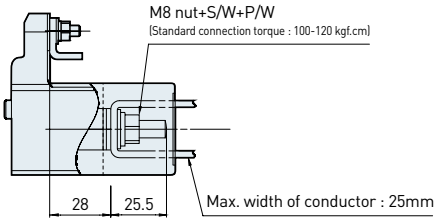

[Drilling holes for mounting]

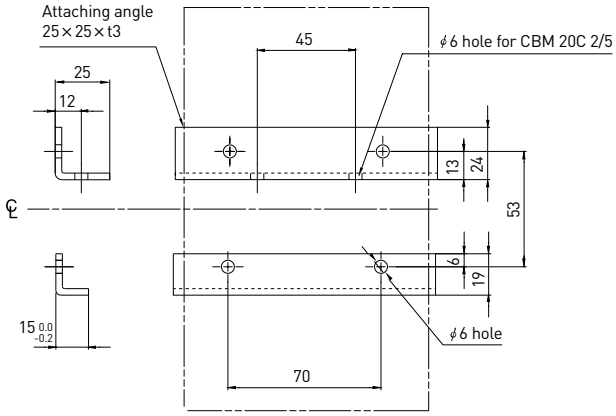

Installation of signal accessories

No. of poles	AUX Auxiliary switch	ALT Trip alarm switch	SHT Shunt trip	UVT Under voltage trip	AXT	AUX SHT	AUX UVT	ALT SHT	ALT UVT	AXT SHT	AXT UVT
3											

Left — Right
Handle
[Front]

※ - AXT is combintaion of AUX and ALT.
- UVT operates at DC voltage. AC voltage will be converted to DC through UVT controller.

Characteristic Curves & Dimensions

| UCB type / 160-250AF, 42-50kA |



- UCB160H
- UCB160L
- UCB250H
- UCB250L

- UCD160H
- UCD250H

※Characteristic curves are not applicable.

Tripping & temperature derating curves

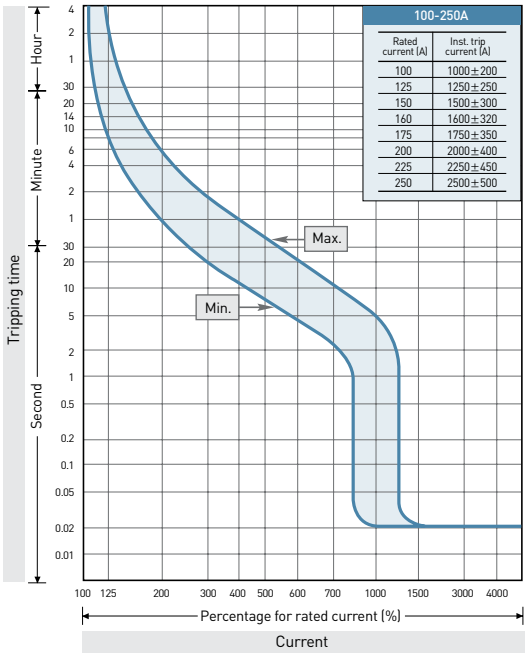

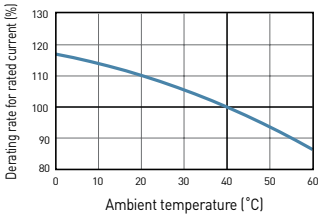

Dimensions

※ ℄ : Center line ⊬ : Handle center line • The allowance of 1.5mm is given around the handle frame. (Unit: mm)

Direct mounting

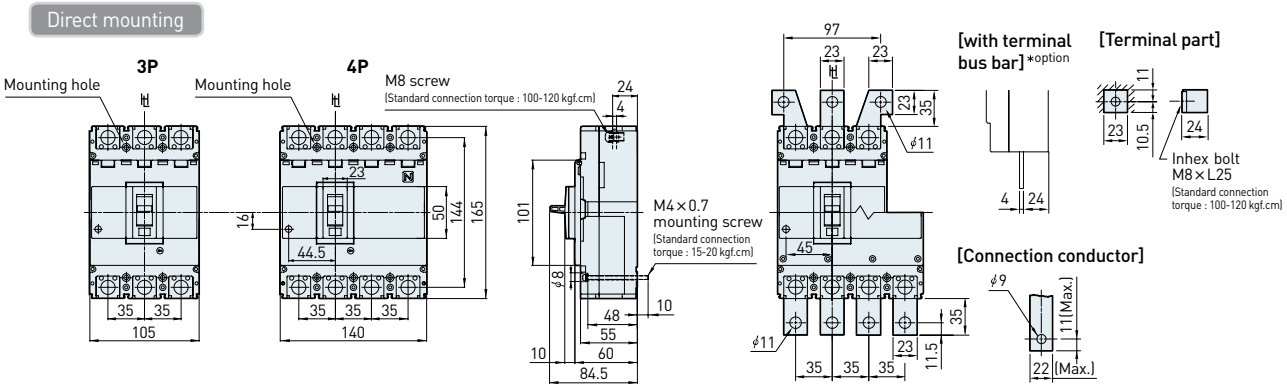

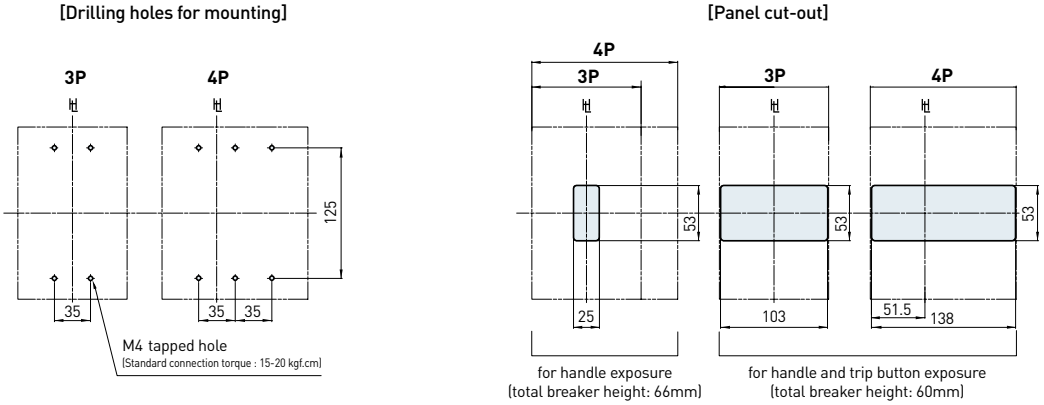

Dimensions

※ ℄ : Center line ⊬ : Handle center line • The allowance of 1.5mm is given around the handle frame. (Unit: mm)

Plug-in mounting

[Plug-in connection part]

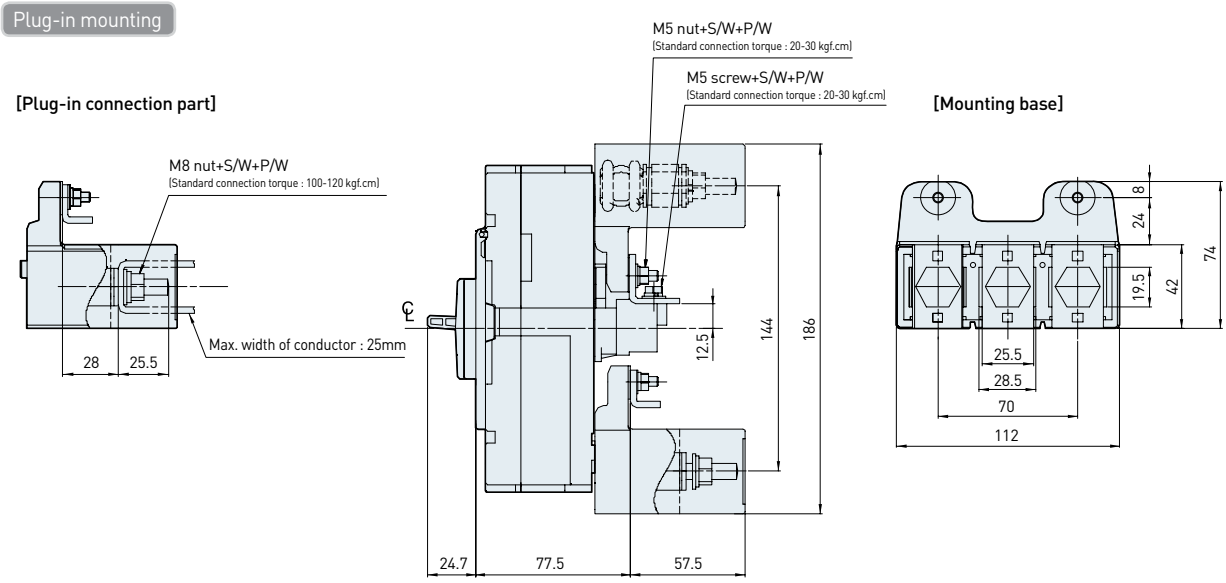

[Mounting base]

[Drilling holes for mounting]

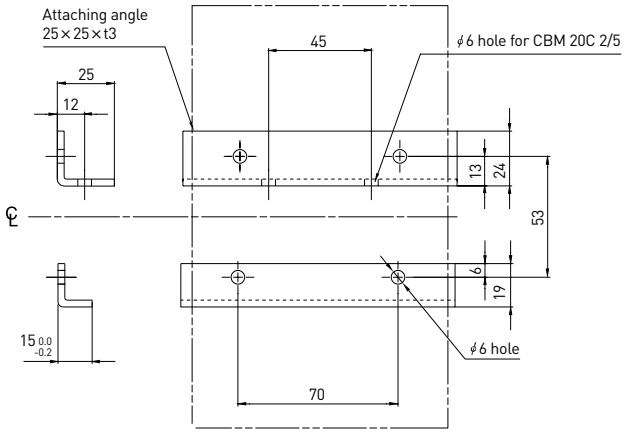

Installation of signal accessories

No. of poles	AUX Auxiliary switch	ALT Trip alarm switch	SHT Shunt trip	UVT Under voltage trip	AXT	AUX ALT	AUX SHT	AUX UVT	ALT SHT	ALT UVT	AXT SHT	AXT UVT
3												

Left — Right

Handle

[Front]

※ - AXT is combintaion of AUX and ALT.
- UVT operates at DC voltage. AC voltage will be converted to DC through UVT controller.

Characteristic Curves & Dimensions

| UCB type / 400AF, 30-100kA |



- UCB400R
- UCB400S
- UCB400H
- UCB400L

- UCD400S

※Characteristic curves are not applicable.

Tripping & temperature derating curves

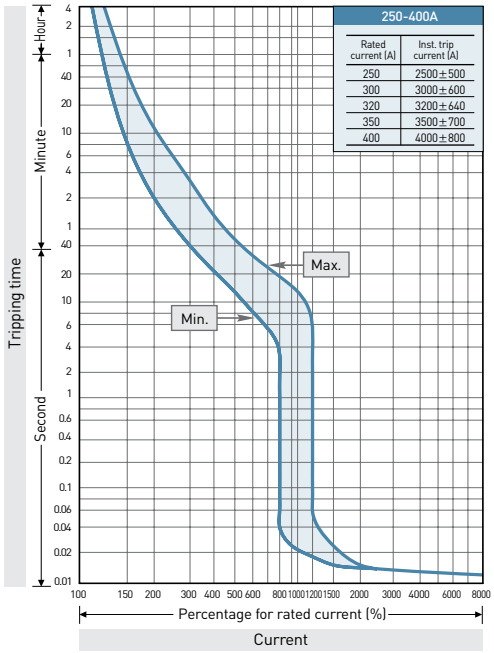

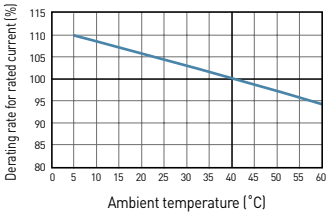

Dimensions

※ ℄ : Center line ℍ : Handle center line • The allowance of 1.5mm is given around the handle frame. (Unit: mm)

Direct mounting

2P, 3P

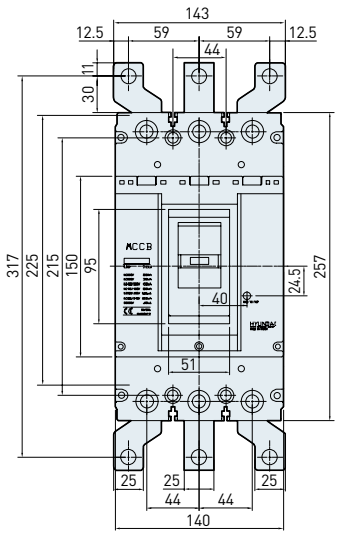

4P

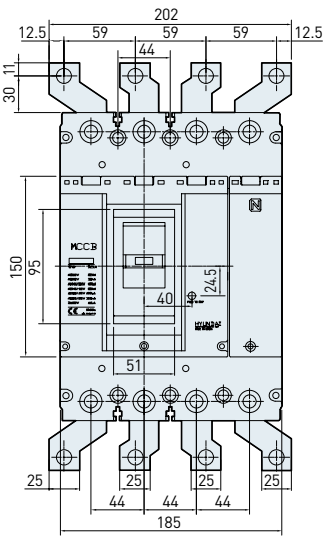

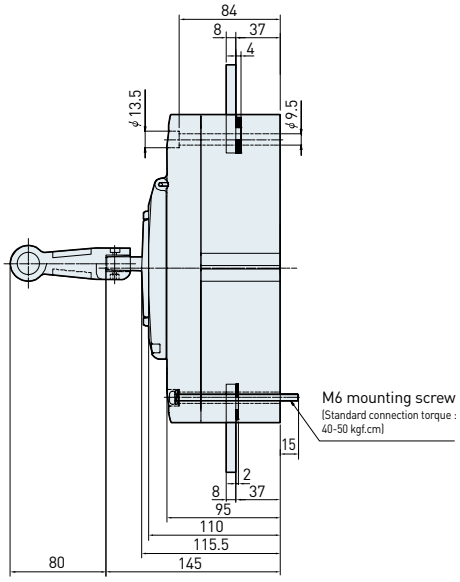

[Terminal part]

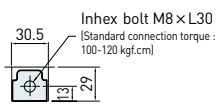

[Connection conductor]

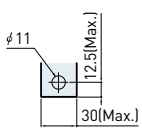

Dimensions

※ ℄ : Center line ℍ : Handle center line • The allowance of 1.5mm is given around the handle frame. (Unit: mm)

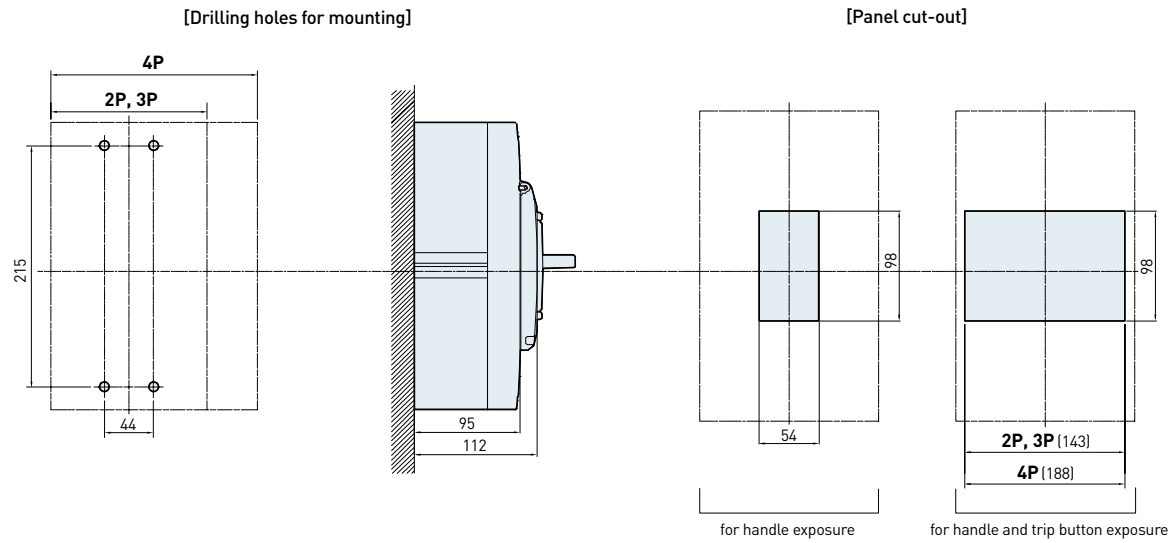

Plug-in mounting

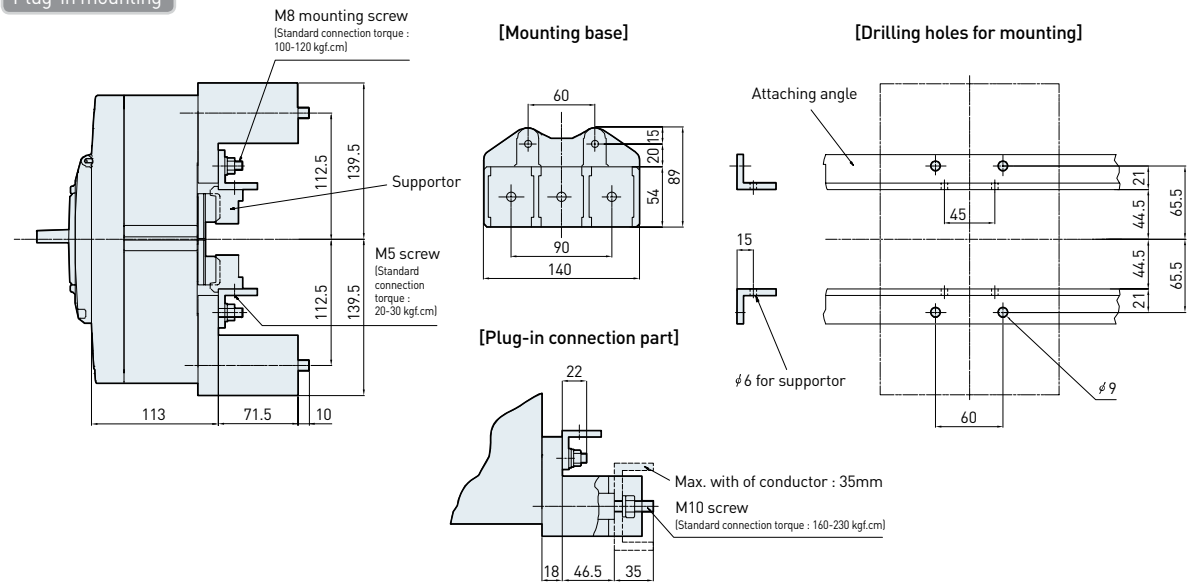

Installation of signal accessories

No. of poles	AUX Auxiliary switch ▯	ALT Trip alarm switch ▮	SHT Shunt trip ☒	UVT Under voltage trip ■	AUX / ALT	AUX / SHT	AUX / UVT	ALT / SHT	ALT / UVT	AUX ALT / SHT	AUX ALT / UVT
3	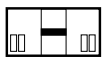		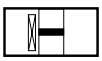		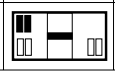	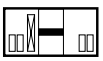				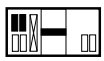	

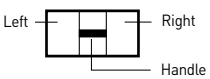

[Front]

※ UVT operates at DC voltage. AC voltage will be converted to DC through UVT controller.

Characteristic Curves & Dimensions

| UCB type / 630AF, 45-100kA |



- UCB630R
- UCB630S
- UCB630H
- UCB630L

- UCD630S

※Characteristic curves are not applicable.

Tripping & temperature derating curves

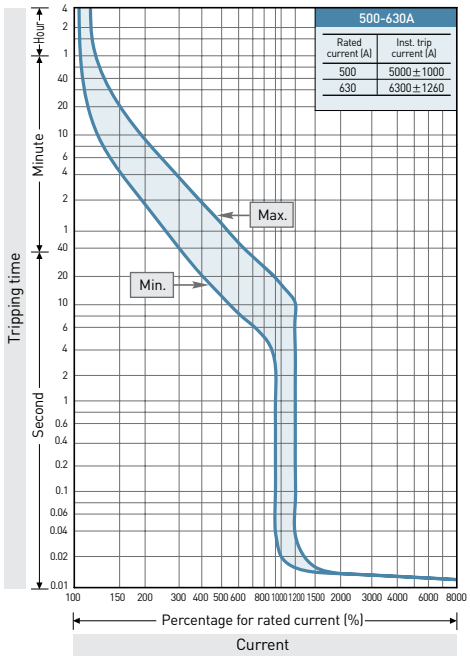

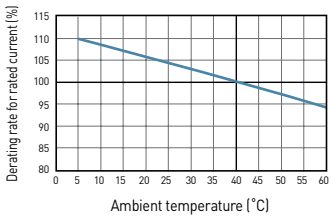

Dimensions

※ ℄ : Center line ⊬ : Handle center line • The allowance of 1.5mm is given around the handle frame. (Unit: mm)

Direct mounting

2P, 3P

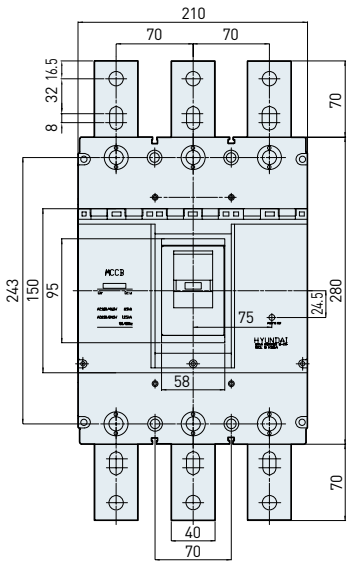

4P

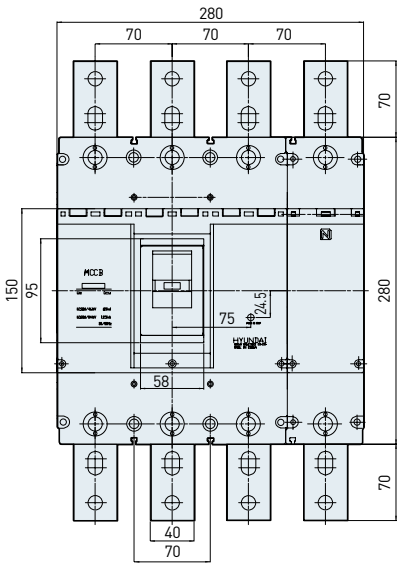

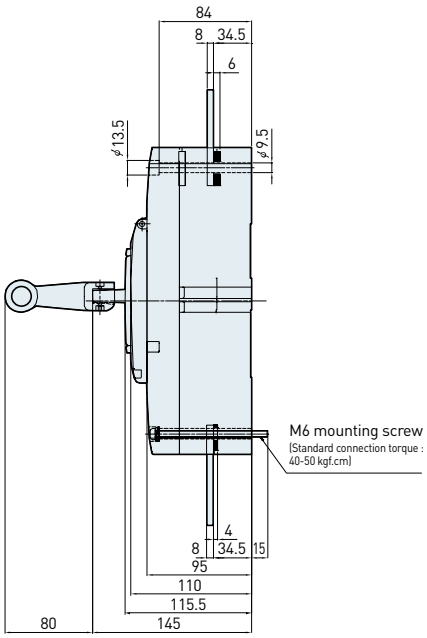

[Terminal part]

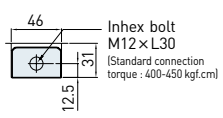

[Connection conductor]

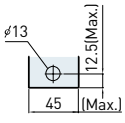

Dimensions

※ ℄ : Center line ℍ : Handle center line • The allowance of 1.5mm is given around the handle frame. (Unit: mm)

[Drilling holes for mounting]

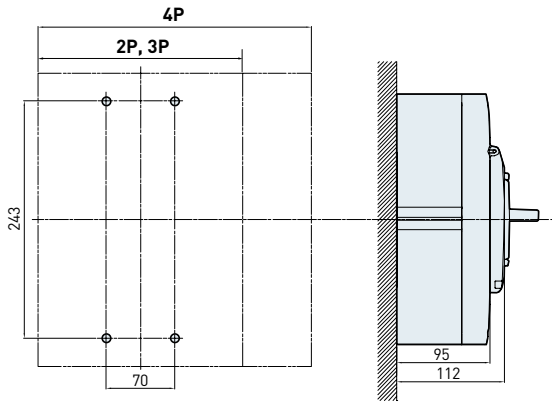

[Panel cut-out]

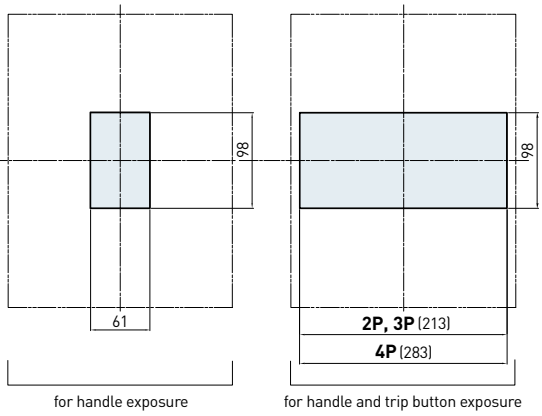

Plug-in mounting

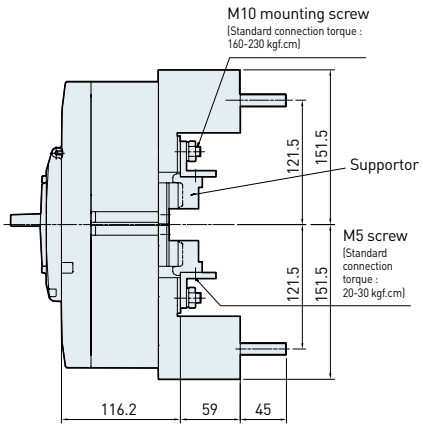

[Mounting base]

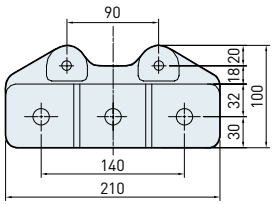

[Plug-in connection part]

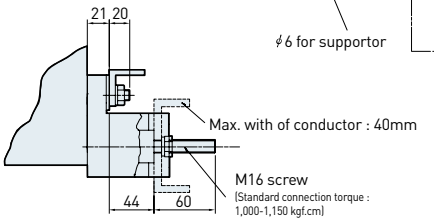

[Drilling holes for mounting]

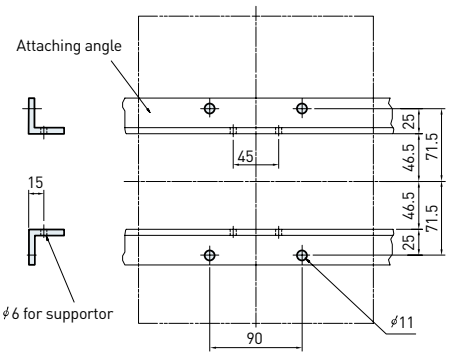

Installation of signal accessories

No. of poles	AUX Auxiliary switch	ALT Trip alarm switch	SHT Shunt trip	UVT Under voltage trip	AUX ALT	AUX SHT	AUX UVT	ALT SHT	ALT UVT	AUX ALT SHT	AUX ALT UVT
3	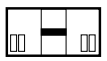	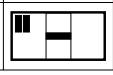	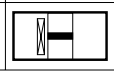		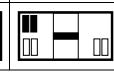	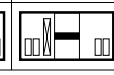	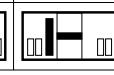	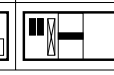	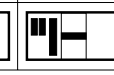		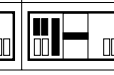

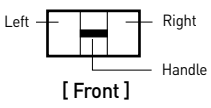

※ UVT operates at DC voltage. AC voltage will be converted to DC through UVT controller.

Characteristic Curves & Dimensions

| UCB type / 800AF, 45-100kA |



- UCB800R
- UCB800S
- UCB800H
- UCB800L

- UCD800S

※Characteristic curves are not applicable.

Tripping & temperature derating curves

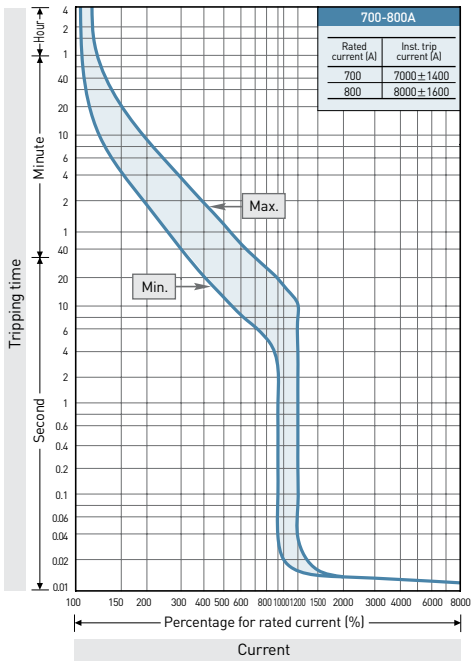

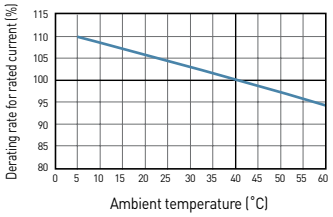

Dimensions

※ ℄ : Center line ⊬ : Handle center line • The allowance of 1.5mm is given around the handle frame. (Unit: mm)

Direct mounting

4P

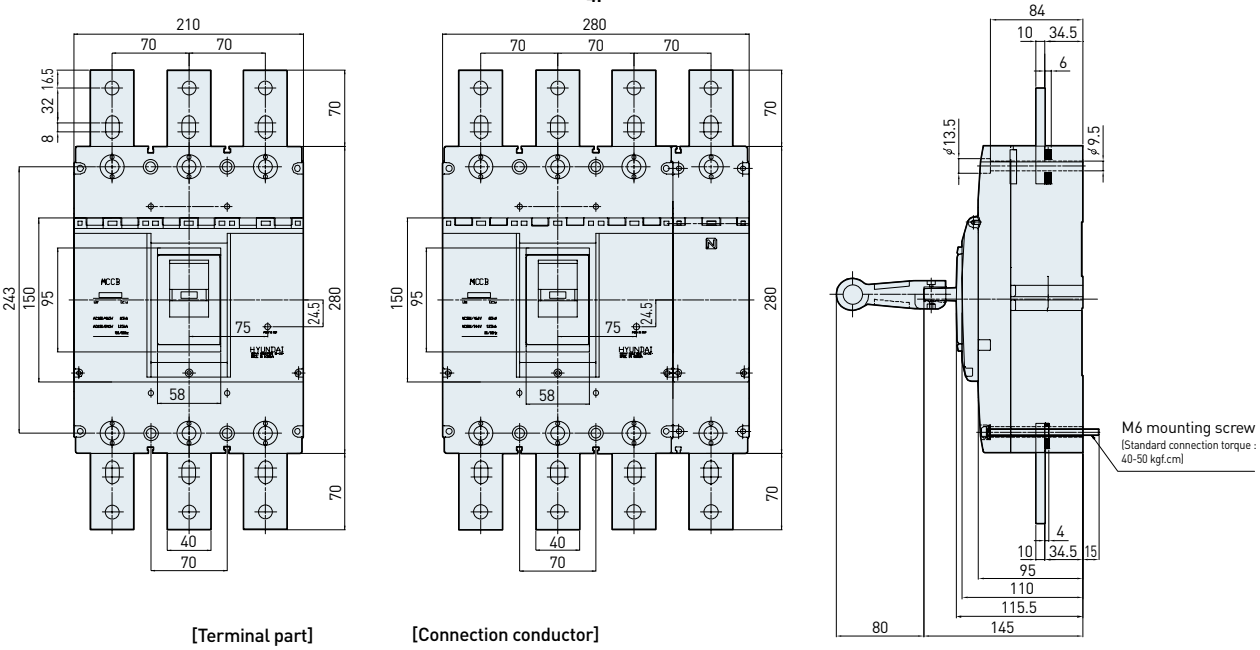

[Terminal part]

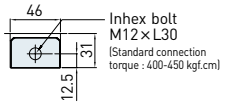

[Connection conductor]

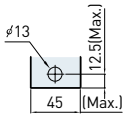

Dimensions

※ ℄ : Center line ℍ : Handle center line • The allowance of 1.5mm is given around the handle frame. (Unit: mm)

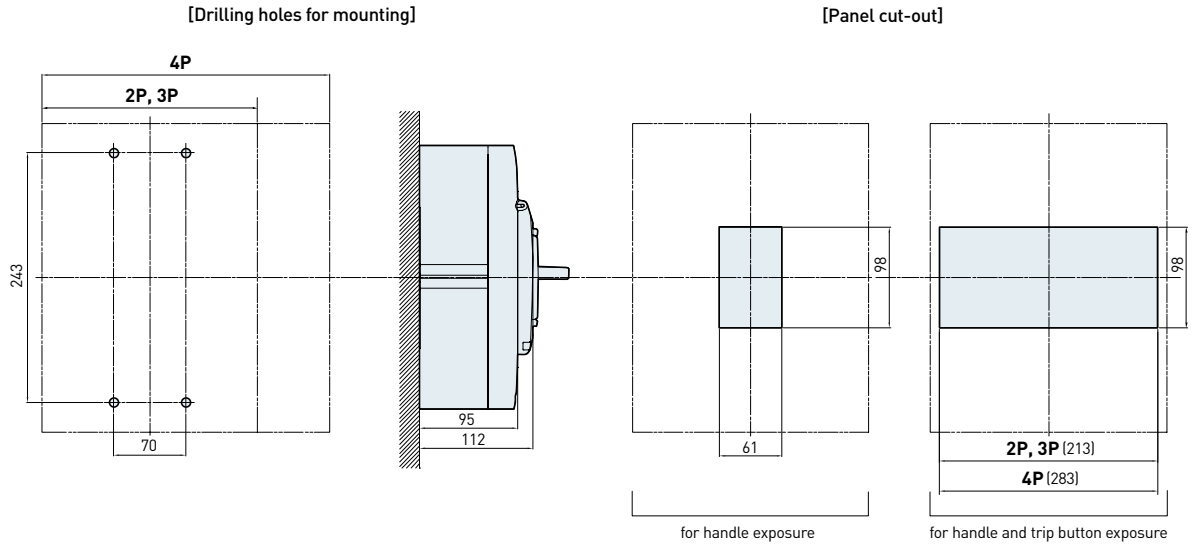

Plug-in mounting

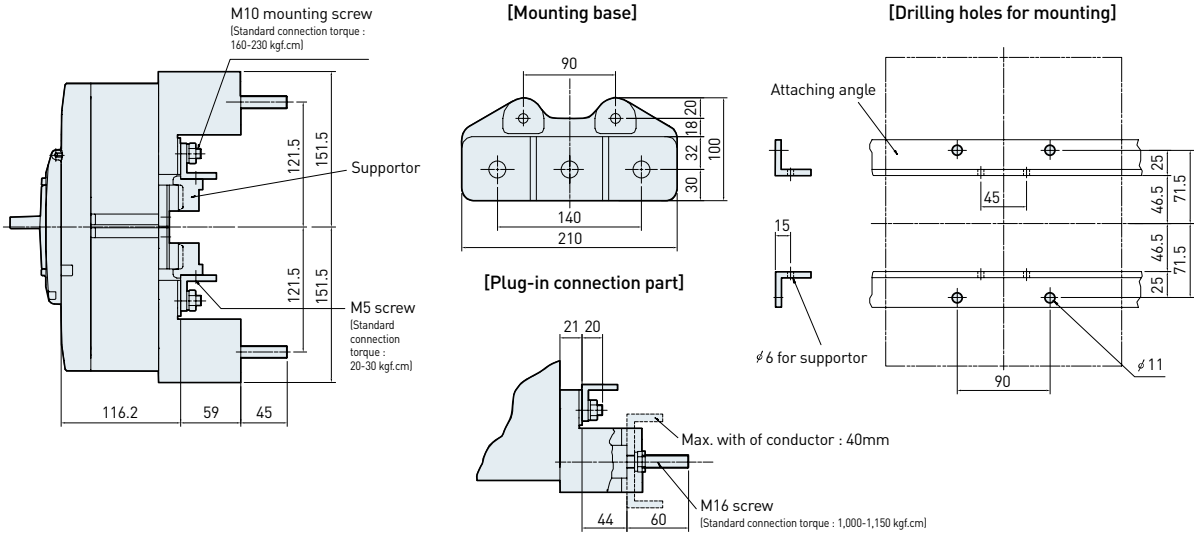

Installation of signal accessories

No. of poles	AUX Auxiliary switch	ALT Trip alarm switch	SHT Shunt trip	UVT Under voltage trip	AUX / ALT	AUX / SHT	AUX / UVT	ALT / SHT	ALT / UVT	AUX ALT / SHT	AUX ALT / UVT
3											

Left — Right

Handle

[Front]

※ UVT operates at DC voltage. AC voltage will be converted to DC through UVT controller.

Characteristic Curves & Dimensions

| UCB type / 1000AF, 100-130kA |



- UCB1000S
- UCB1000L

- UCD1000S

※Characteristics are not applicable.

Tripping curves

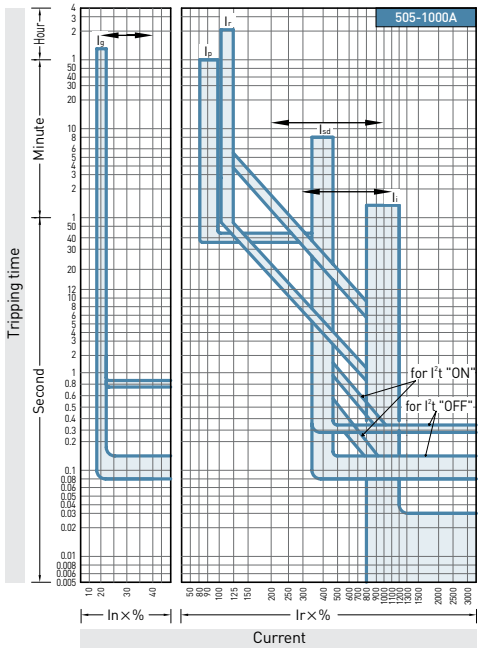

Protection characteristics

Characteristics		Setting value or range	Tolerance
Rated (CT) current [In] (A)		1000	
LTD	Rated current setting [Ir] (A)	505, 535, 565, 600, 630, 640, 680, 720, 760, 800, 850, 900, 950, 1000	
	Long time setting [tr]	2-4-6-8-12 sec. at Ir x 600%	±20%
STD[1]	Short time current setting [Isd] (A)	Ir x NON-200-400-600-800-1000%	±15%
	Time delay setting [tsd][1]	0-0.1-0.2-0.3 sec. at definite time-limit section	+50ms −20ms
INST	Instantaneous current setting [Ii] (A)	In x NON-300-600-800-1000-1100%	±20%
GFT[2]	Ground fault current [Ig] (A)	In x NON-20-30-40%	±15%
	Ground fault delay setting [tg]	0.1-0.2-0.3-0.4-0.8 sec. at definite time-limit section	+50ms −20ms
PTA	Pre-trip alarm current [Ip] (A)	Ir x 90%	±10%

※ -The default values are underlined. Please check and adjust the setting condition of each characteristic before use.
-1] I²t characteristic can be ON or OFF by adjusting the [tsd] knob.
-2] GFT protection is option.

Dimensions

※ ℄ : Center line 卄 : Handle center line • The allowance of 1.5mm is given around the handle frame. (Unit: mm)

Direct mounting | UCB1000S

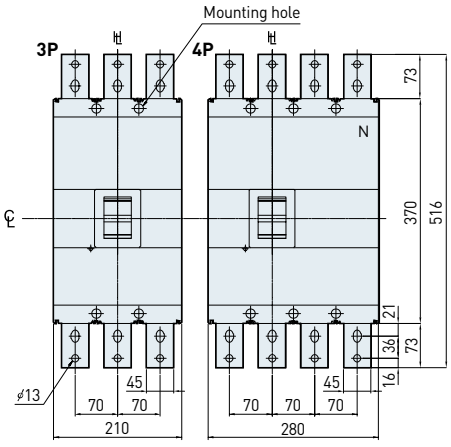

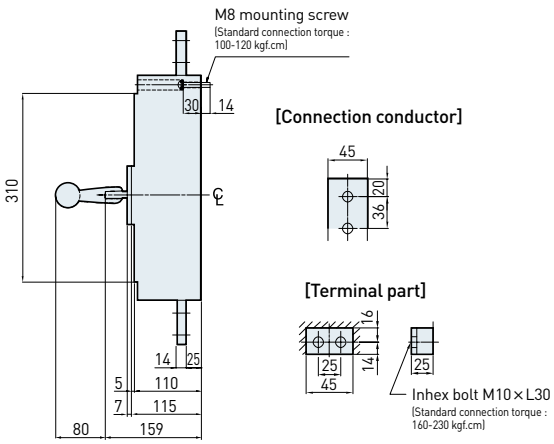

[Drilling holes for mounting]

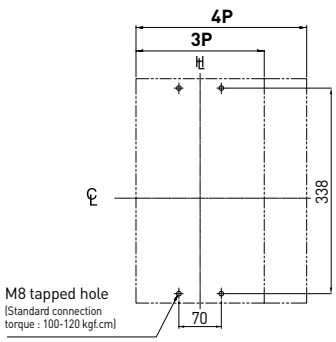

[Panel cut-out]

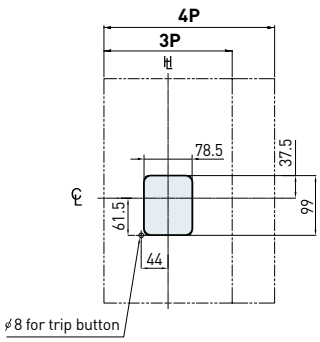

Dimensions

※ ℄ : Center line 卄 : Handle center line • The allowance of 1.5mm is given around the handle frame. (Unit: mm)

Direct mounting | UCB1000L

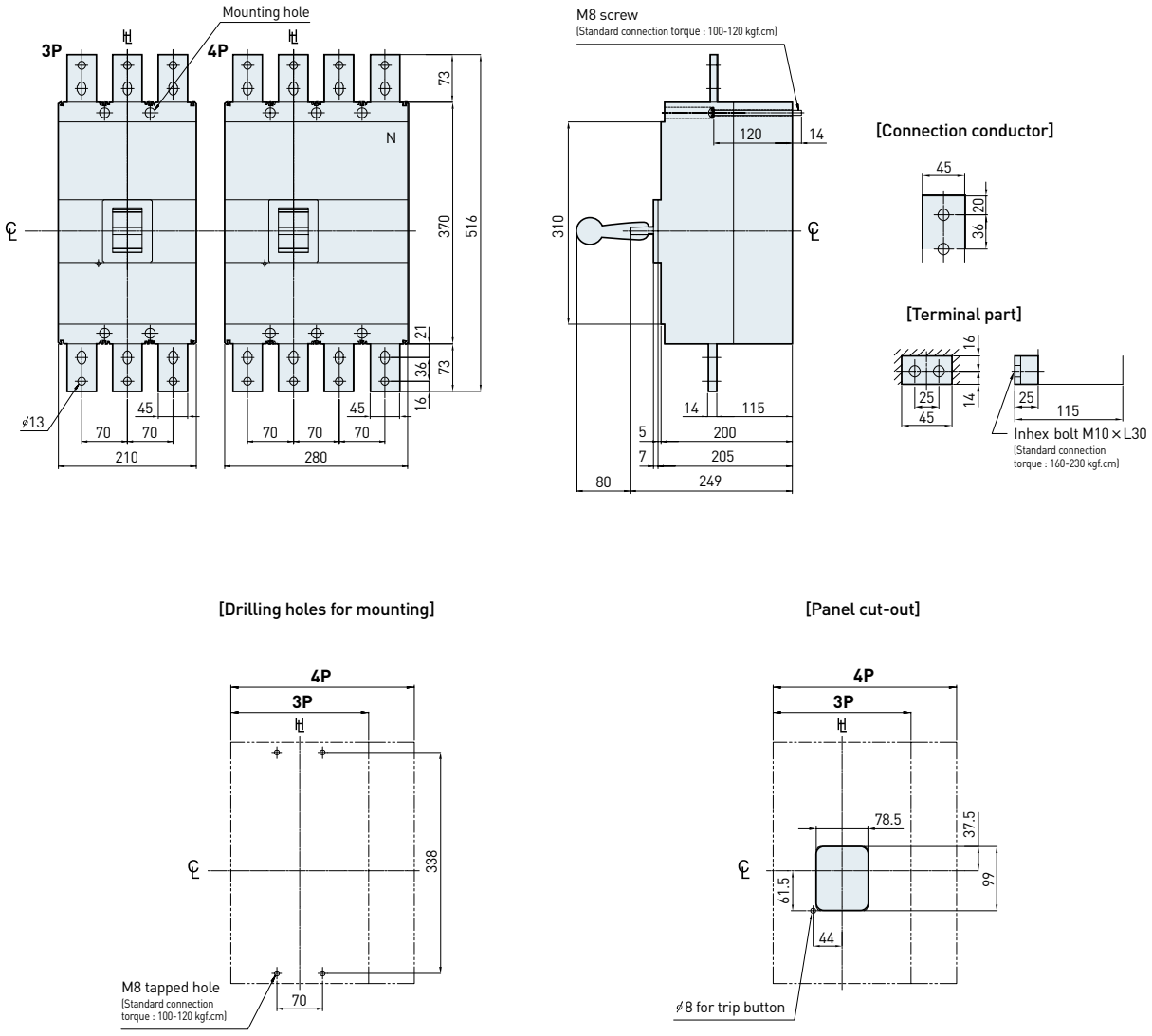

[Drilling holes for mounting]

[Panel cut-out]

Installation of signal accessories

No. of poles	AUX Auxiliary switch	ALT Trip alarm switch	SHT Shunt trip	UVT Under voltage trip	AUX ALT	AUX SHT	AUX UVT	ALT SHT	ALT UVT	AUX ALT SHT	AUX ALT UVT
3											

※ AXT is combintaion of AUX and ALT.

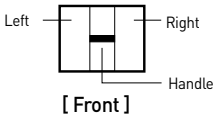

Characteristic Curves & Dimensions

| UCB type / 1250AF, 100-130kA |



- UCB1250S
- UCB1250L

- UCD1250S

※Characteristics are not applicable.

Tripping curves

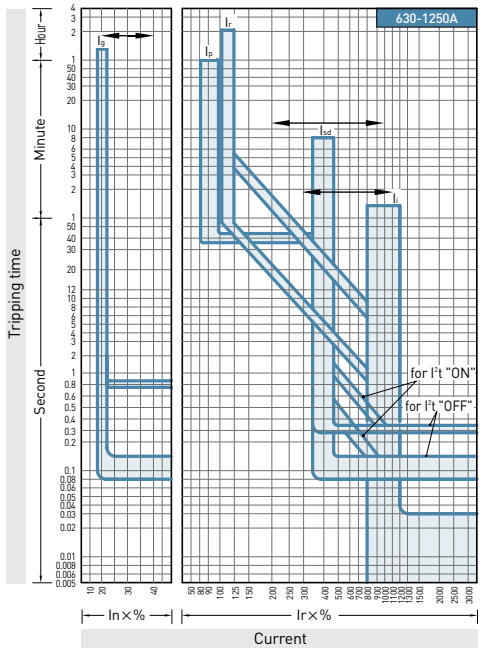

Protection characteristics

Characteristics		Setting value or range	Tolerance
Rated (CT) current [In] (A)		1250	
LTD	Rated current setting [Ir] (A)	630, 670, 710, 750, 790, 800, 850, 900, 950, 1000, 1060, 1125, 1190, 1250	
	Long time setting [tr]	2-4-6-8-12 sec. at Ir x 600%	± 20%
STD[1]	Short time current setting [Isd] (A)	Ir x NON-200-400-600-800-1000%	± 15%
	Time delay setting [tsd][1]	0-0.1-0.2-0.3 sec. at definite time-limit section	+ 50ms − 20ms
INST	Instantaneous current setting [Ii] (A)	In x NON-300-600-800-1000-1100%	± 20%
GFT[2]	Ground fault current [Ig] (A)	In x NON-20-30-40%	± 15%
	Ground fault delay setting [tg]	0.1-0.2-0.3-0.4-0.8 sec. at definite time-limit section	+ 50ms − 20ms
PTA	Pre-trip alarm current [Ip] (A)	Ir x 90%	± 10%

※ -The default values are underlined. Please check and adjust the setting condition of each characteristic before use.
-1] I²t characteristic can be ON or OFF by adjusting the [tsd] knob.
-2] GFT protection is option.

Dimensions

※ ℄ : Center line 卄 : Handle center line The allowance of 1.5mm is given around the handle frame. (Unit: mm)

Direct mounting UCB1250S

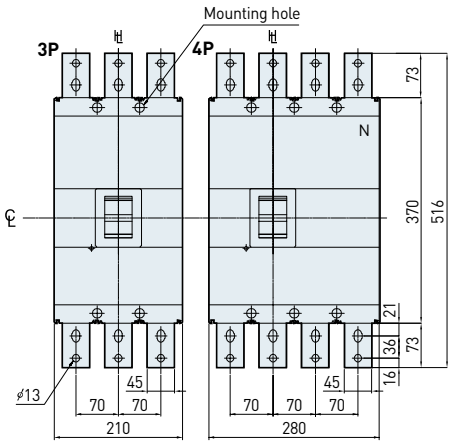

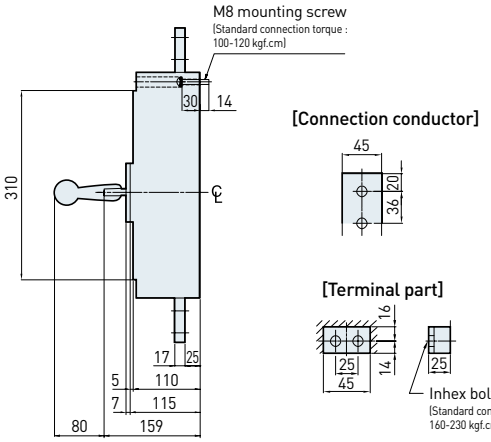

[Drilling holes for mounting]

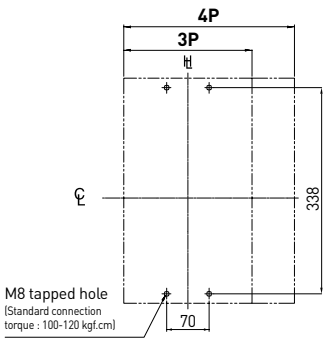

[Panel cut-out]

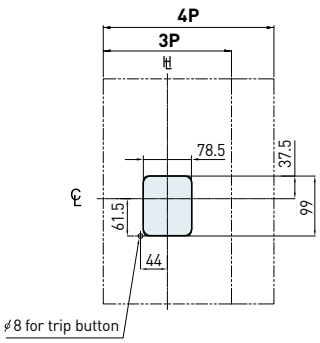

Dimensions

※ ℄ : Center line ⊬ : Handle center line • The allowance of 1.5mm is given around the handle frame. (Unit: mm)

Direct mounting | UCB1250L

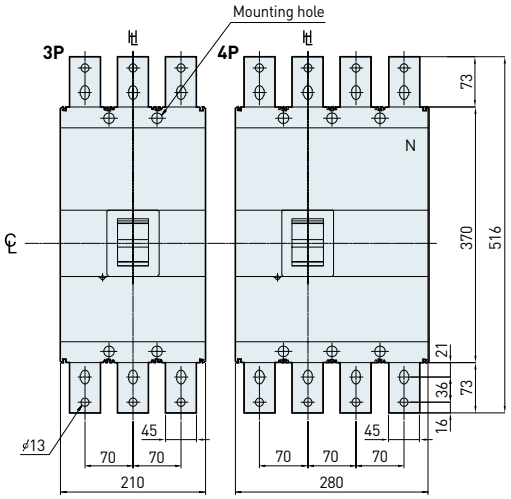

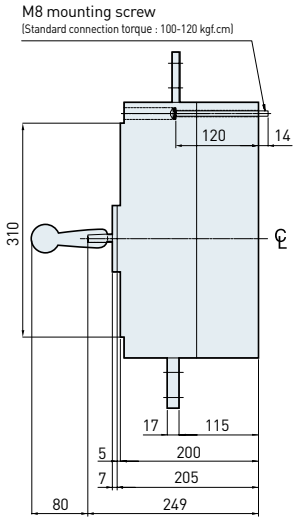

[Connection conductor]

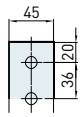

[Terminal part]

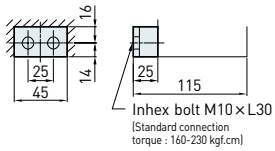

[Drilling holes for mounting]

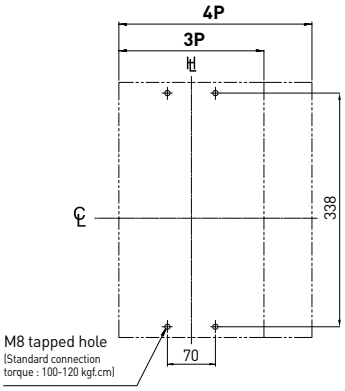

[Panel cut-out]

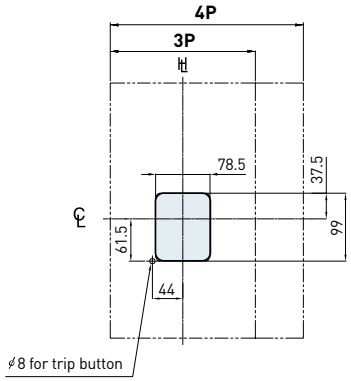

Installation of signal accessories

No. of poles	AUX Auxiliary switch	ALT Trip alarm switch	SHT Shunt trip	UVT Under voltage trip	AXT	AUX SHT	AUX UVT	ALT SHT	ALT UVT	AUX ALT SHT	AUX ALT UVT
3											

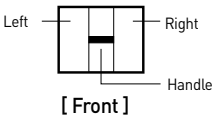

AXT is combintaion of AUX and ALT.

Characteristic Curves & Dimensions

| UCB type / 1600AF, 65kA |



• UCB1600S

Tripping curves

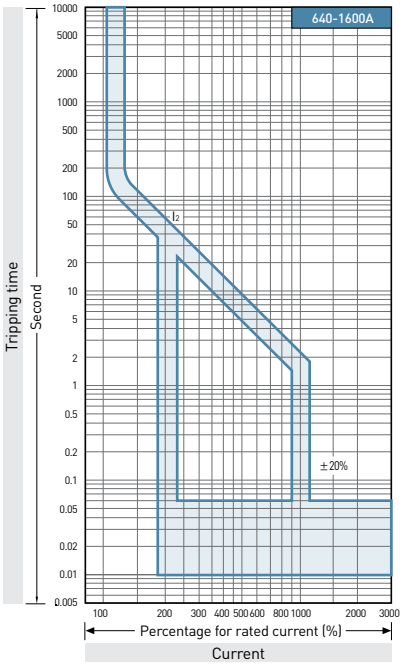

Protection characteristics

Characteristics		Setting value or range	Tolerance
Rated (CT) current [In] (A)		1600	
LTD	Rated current setting [I_1] (A)	640, 800, 960, 1120, 1250, 1440, 1520, 1600	
INST	Instantaneous current setting [I_2] (A)	I_1 x 200-300-400-500-600-700-800-1000%	±10%

※ -The default values are underlined. Please check and adjust the setting condition of each characteristic before use.

Dimensions

※ ℄ : Center line ⊬ : Handle center line • The allowance of 1.5mm is given around the handle frame. (Unit: mm)

Direct mounting

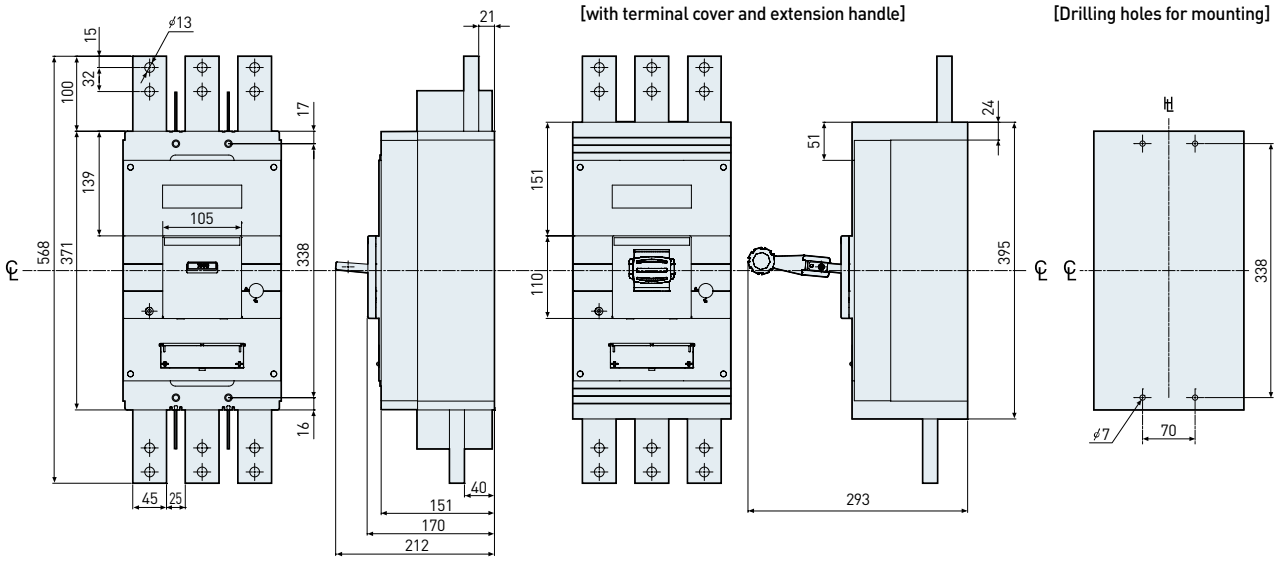

[Terminal cover]

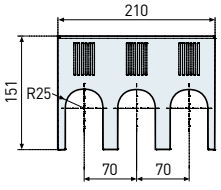

[Extension handle]

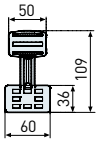

Characteristic Curves & Dimensions

| UPB type / 125-250AF, 85-150kA / Adjustable thermal |



- UPB100S • UPB100H
- UPB100L • UPB100X
- UPB160S • UPB160H
- UPB160L • UPB160X
- UPB250S • UPB250H
- UPB250L • UPB250X

- UPD100S • UPD160S
- UPD250S

※Characteristic curves are not applicable.

Tripping & temperature derating curves

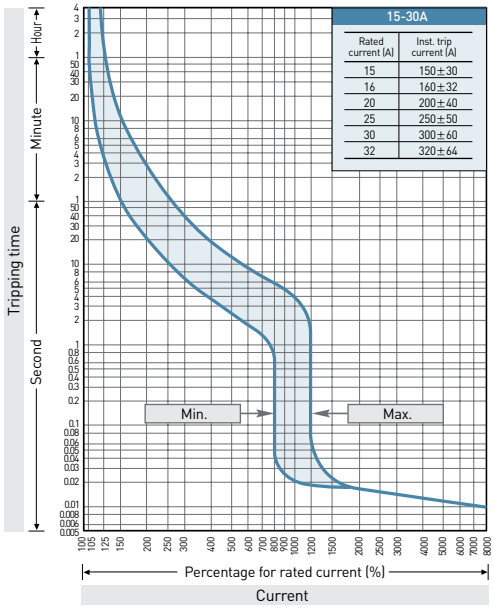

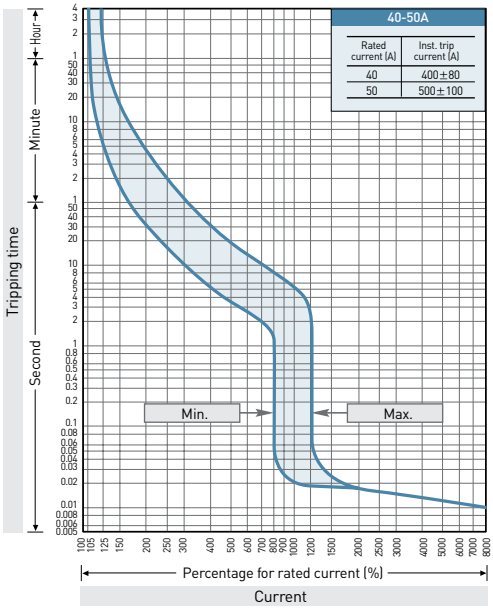

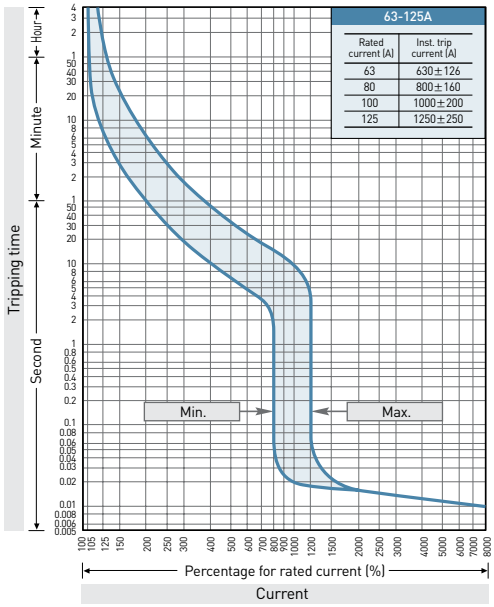

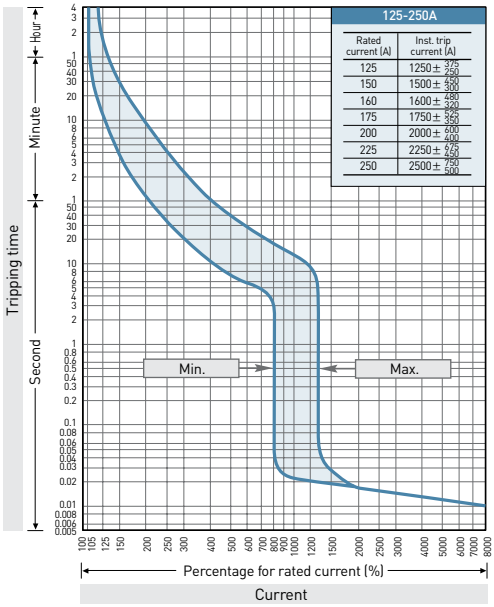

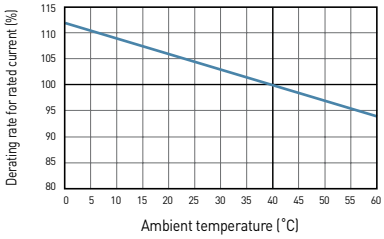

Dimensions

※ ℄ : Center line ⊢ : Handle center line • The allowance of 1.5mm is given around the handle frame. (Unit: mm)

Direct mounting

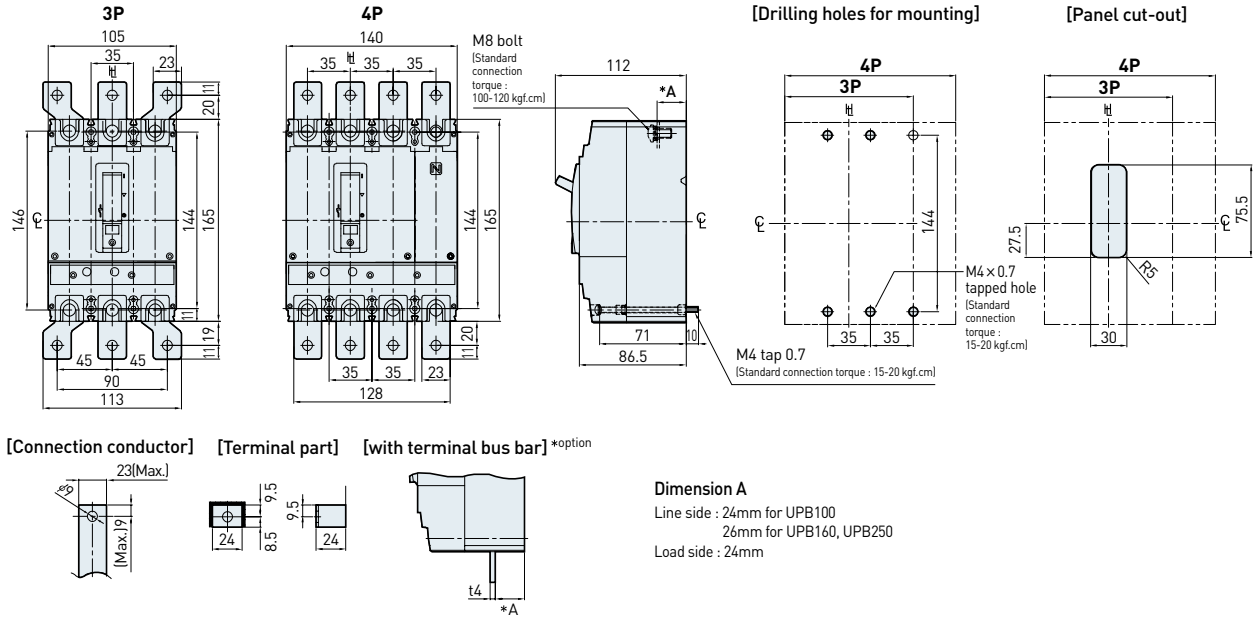

Plug-in mounting

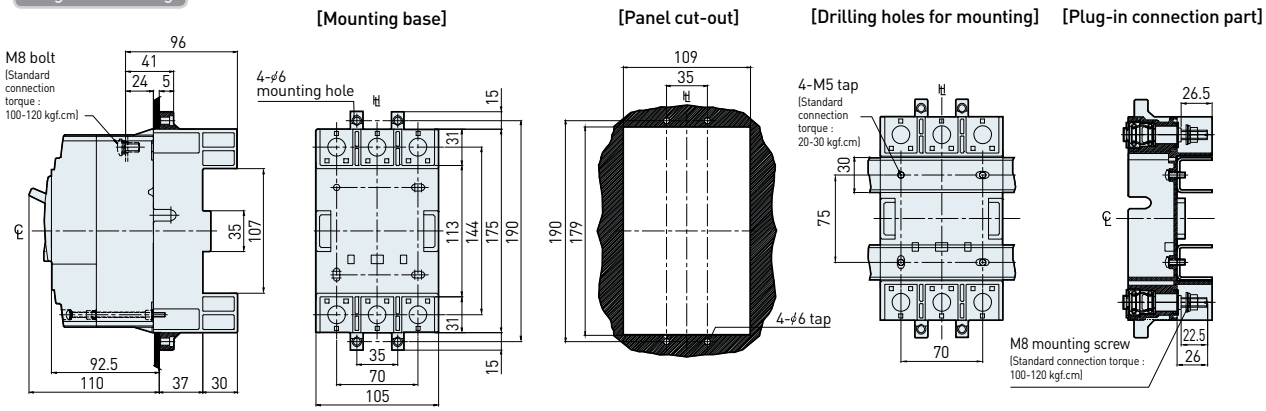

Installation of signal accessories

No. of poles	AUX Auxiliary switch ▯	ALT Trip alarm switch ▮	SHT Shunt trip ☒	UVT Under voltage trip ▮	AUX ALT	AUX SHT	AUX UVT	ALT SHT	ALT UVT	AUX ALT SHT	AUX ALT UVT
3											

Left — Right
Handle
[Front]

Characteristic Curves & Dimensions

| UPB type / 125-250AF, 85-150kA / Electronic |



- UPB100S • UPB100H
- UPB100L • UPB100X
- UPB160S • UPB160H
- UPB160L • UPB160X
- UPB250S • UPB250H
- UPB250L • UPB250X

Tripping curves

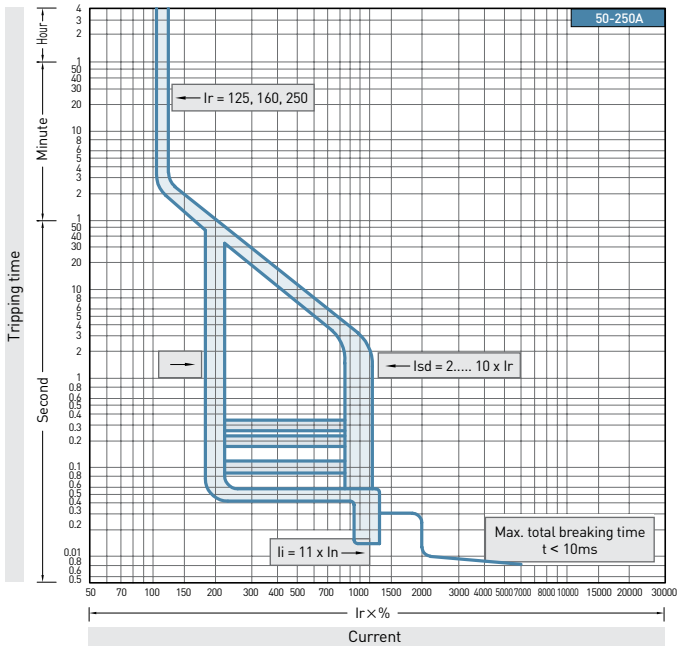

Protection characteristics

Characteristics		Setting value or range			Tolerance
		UPB100	UPB160	UPB250	
Rated (CT) current [In] (A)		**125**	**160**	**250**	
LTD	Rated current setting [Ir] (A)	50, 55, 63, 70, 80, 90, 100, 115, **125**	63, 70, 80, 90, 100, 110, 125, 140, **160**	100, 110, 125, 140, 160, 175, 200, 225, **250**	
	Long time setting [tr]	6.25 sec. at Ir x 600%			±20%
STD	Short time current setting [Isd] (A)	Ir x NON-200-300-400-500-600-700-800-900-**1000**%			
	Time delay setting [tsd]	0.05-0.1-0.2-**0.3** sec. at definite time-limit section			+50ms −20ms
INST	Instantaneous current setting [Ii] (A)	In x **1100%**			±20%
PTA	Pre-trip alarm current [Ip] (A)	Ir x **90%**			±10%

※ -The default values are underlined. Please check and adjust the setting condition of each characteristic before use.

Dimensions

※ ℄ : Center line 卄 : Handle center line • The allowance of 1.5mm is given around the handle frame. (Unit: mm)

Direct mounting

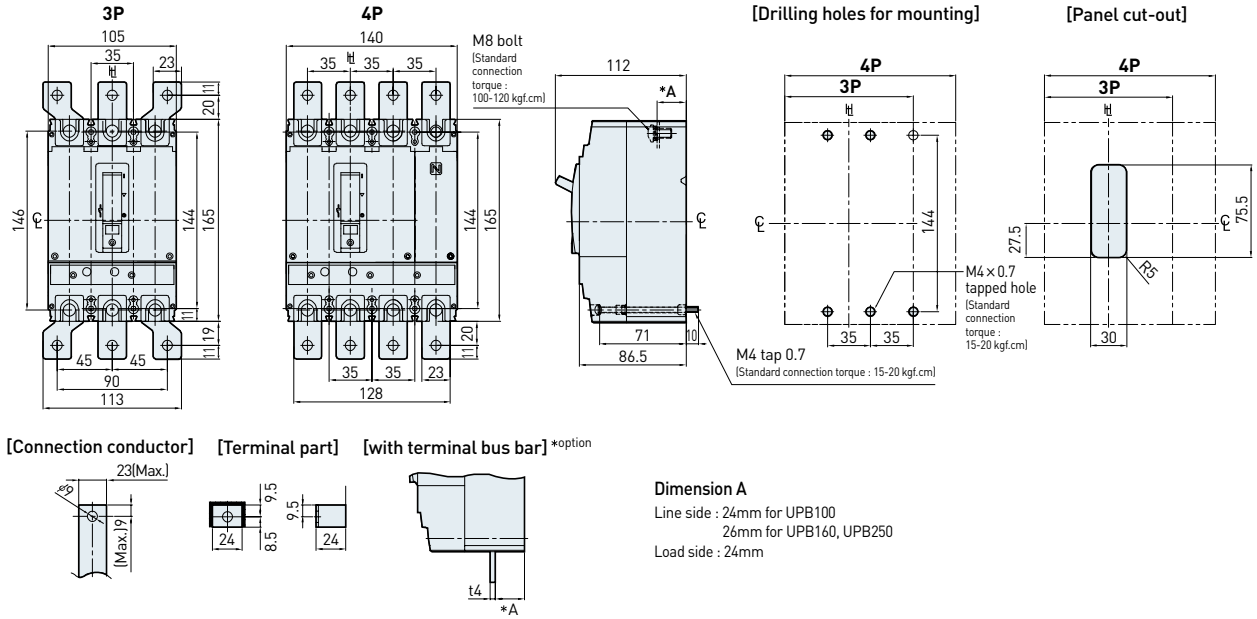

[Connection conductor] [Terminal part] [with terminal bus bar] *option

Dimension A

Line side : 24mm for UPB100
26mm for UPB160, UPB250
Load side : 24mm

Plug-in mounting

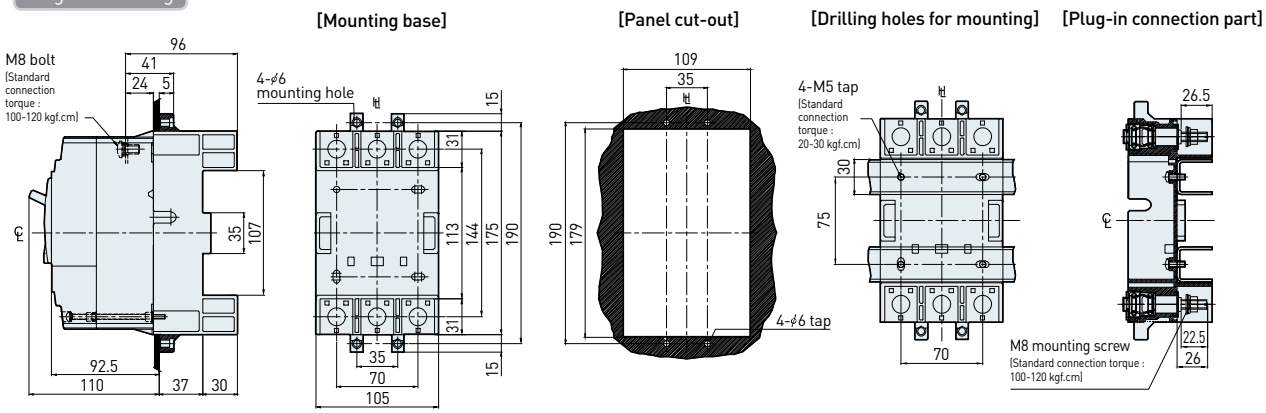

Installation of signal accessories

No. of poles	AUX Auxiliary switch	ALT Trip alarm switch	SHT Shunt trip	UVT Under voltage trip	AUX ALT	AUX SHT	AUX UVT	ALT SHT	ALT UVT	AUX ALT SHT	AUX ALT UVT
3											

Left — Right
Handle
[Front]

Characteristic Curves & Dimensions

| UPB type / 400-630AF, 85-150kA |



- UPB400S • UPB400H
- UPB400L • UPB400X
- UPB630S • UPB630H
- UPB630L • UPB630X

- UPD400S • UPD630S

※Characteristics are not applicable.

Tripping curves

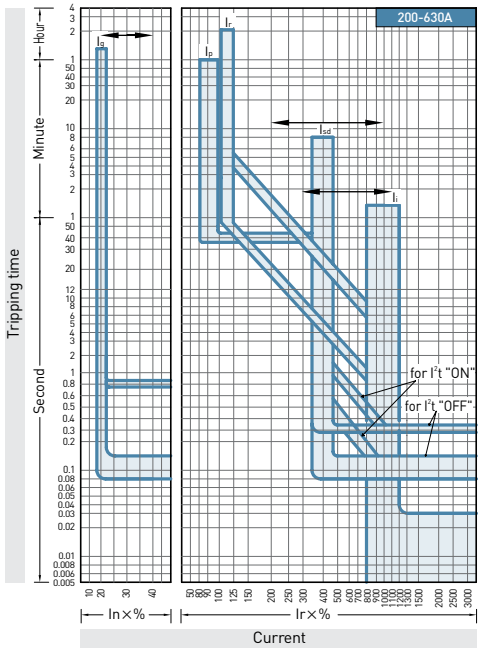

Protection characteristics

Characteristics		Setting value or range		Tolerance
		UPB400	UPB630	
Rated (CT) current [In] (A)		400	630	
LTD	Rated current setting [Ir] (A)	200, 215, 225, 240, 250, 255, 270, 290, 300, 320, 340, 360, 380, 400	320, 340, 360, 380, 400, 430, 450, 480, 500, 540, 570, 600, 630	
	Long time setting [tr]	2-4-6-8-12 sec. at Ir x 600%		± 20%
STD[1]	Short time current setting [Isd] (A)	Ir x NON-200-400-600-800-1000%		± 15%
	Time delay setting [tsd] [1]	0-0.1-0.2-0.3 sec. at definite time-limit section		+ 50ms − 20ms
INST	Instantaneous current setting [Ii] (A)	In x NON-300-600-800-1000-1100%		± 20%
GFT[2]	Ground fault current [Ig] (A)	In x NON-20-30-40%		± 15%
	Ground fault delay setting [tg]	0.1-0.2-0.3-0.4-0.8 sec. at definite time-limit section		+ 50ms − 20ms
PTA	Pre-trip alarm current [Ip] (A)	Ir x 90%		± 10%

※ -The default values are underlined. Please check and adjust the setting condition of each characteristic before use.
-1] I²t characteristic can be ON or OFF by adjusting the [tsd] knob.
-2] GFT protection is option.

Dimensions

※ ℄ : Center line ℍ : Handle center line • The allowance of 1.5mm is given around the handle frame. (Unit: mm)

Direct mounting | UPB400, UPD400S

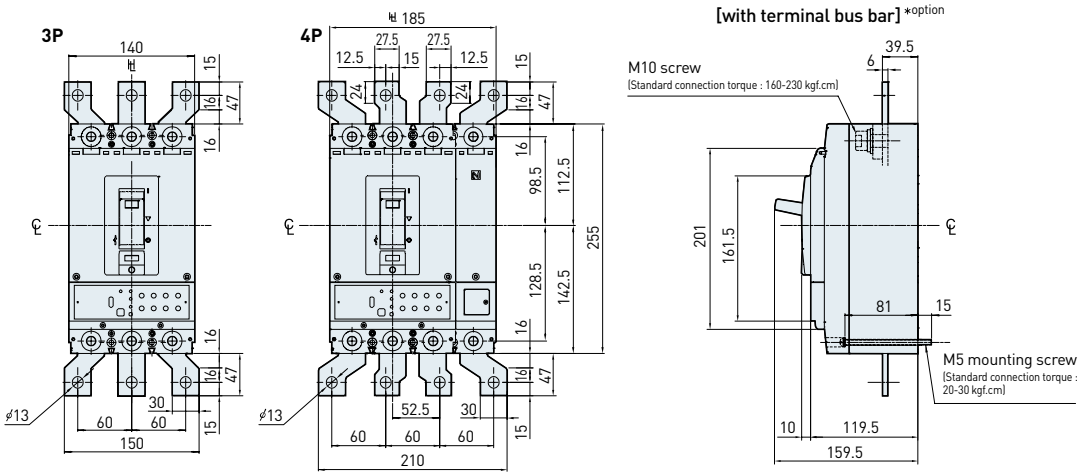

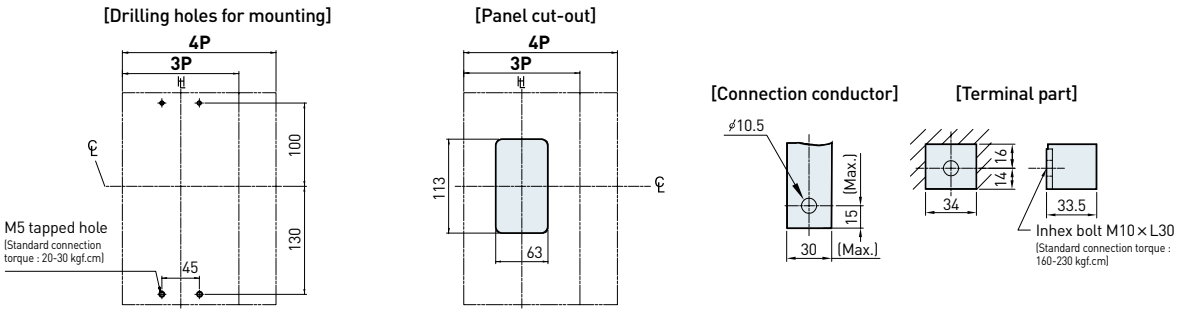

Dimensions

※ ℄ : Center line 卄 : Handle center line • The allowance of 1.5mm is given around the handle frame. (Unit: mm)

Direct mounting | UPB630, UPD630S

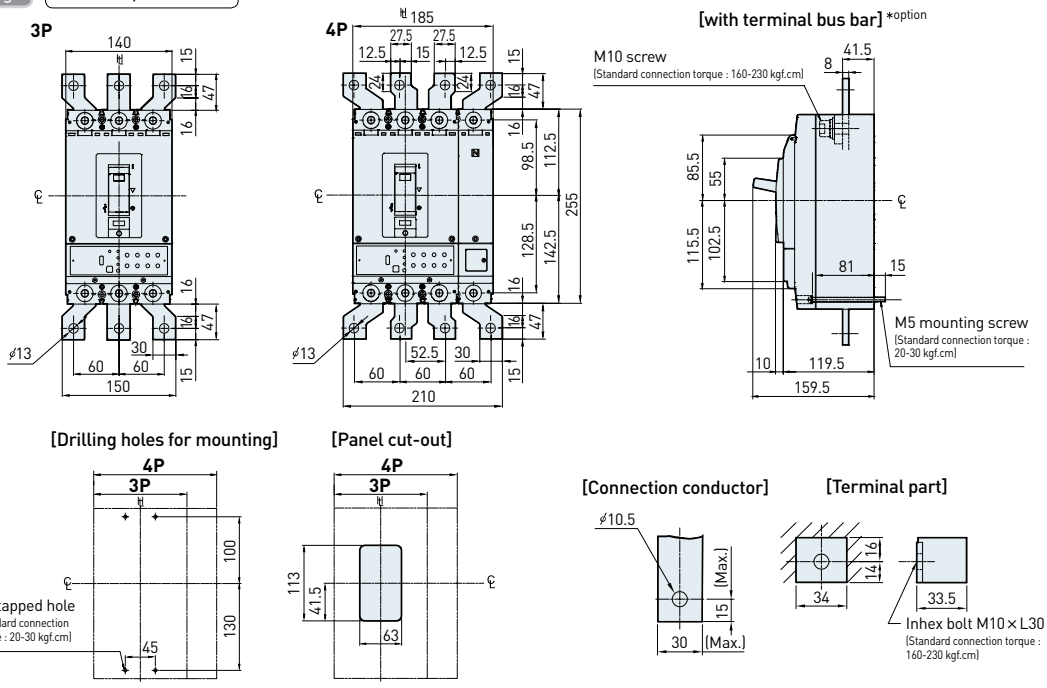

Plug-in mounting

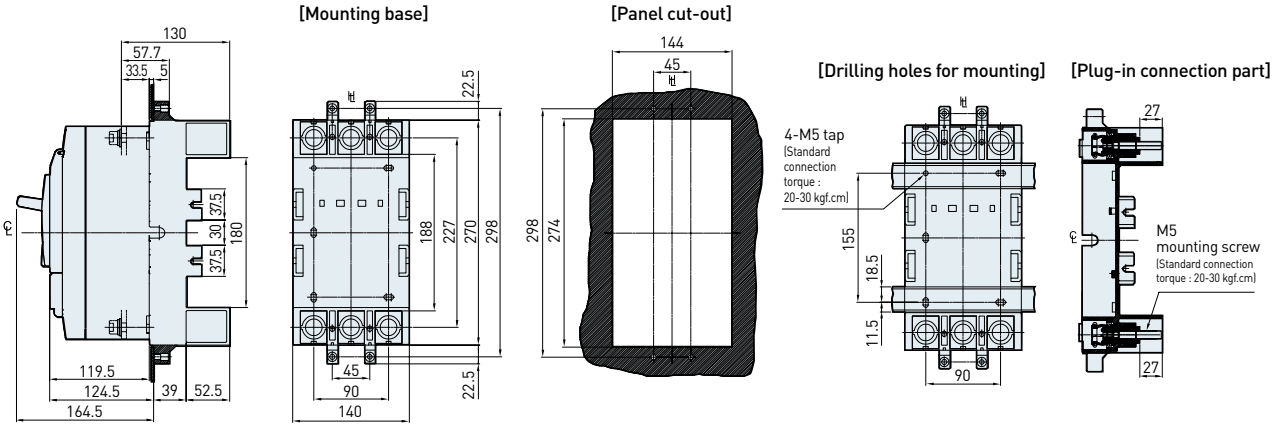

Installation of signal accessories

No. of poles	AUX Auxiliary switch ▯	ALT Trip alarm switch ▮	SHT Shunt trip ☒	UVT Under voltage trip ■	AUX ALT	AUX SHT	AUX UVT	ALT SHT	ALT UVT	AUX ALT SHT	AUX ALT UVT
3											

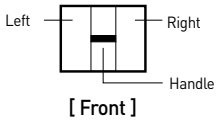

Characteristic Curves & Dimensions

| Motor protection / UPB type 125-250AF, 100-130kA |



- UPB100H
- UPB100L
- UPB250H
- UPB250L

Tripping curves

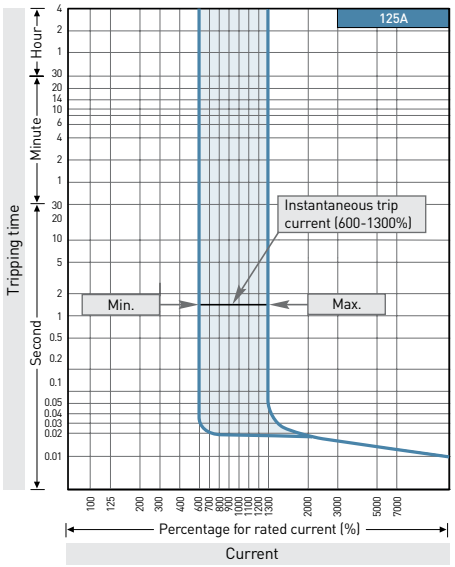

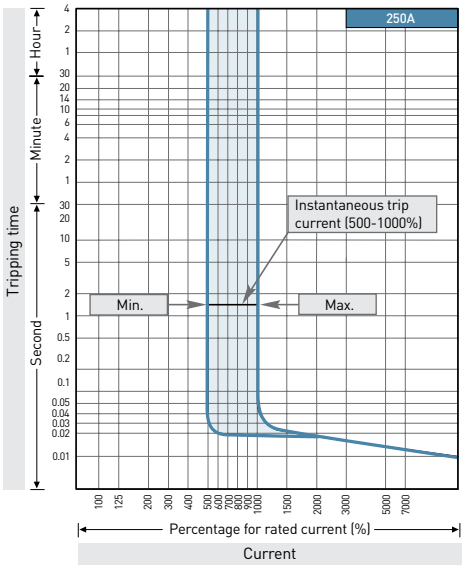

Instantaneous trip current

UPB100

Rated current (A)	Multiple for rated current							
	6	7	8	9	10	11	12	13
2.5	15	17.5	20	22.5	25	27.5	30	32.5
3.2	19.2	22.4	25.6	28.8	32	35.2	38.4	41.6
6.3	37.8	44.1	50.4	56.7	63	69.3	75.6	81.9
12.5	75	87.5	100	112.5	125	137.5	150	162.5
20	120	140	160	180	200	220	240	260
32	192	224	256	288	320	352	384	416
50	300	350	400	450	500	550	600	650
63	378	441	504	567	630	693	756	819
80	480	560	640	720	800	880	960	1040
100	600	700	800	900	1000	1100	1200	1300

※ Tolerance for setting current: -20% - +30%

UPB250

Rated current (A)	Multiple for rated current					
	5	6	7	8	9	10
125	625	750	875	1000	1125	1250
150	750	900	1050	1200	1350	1500
175	875	1050	1225	1400	1575	1750
200	1000	1200	1400	1600	1800	2000
225	1125	1350	1575	1800	2025	2250

※ Tolerance for setting current: -20% - +30%

Dimensions

※ ℄ : Center line ⊬ : Handle center line • The allowance of 1.5mm is given around the handle frame. (Unit: mm)

Direct mounting

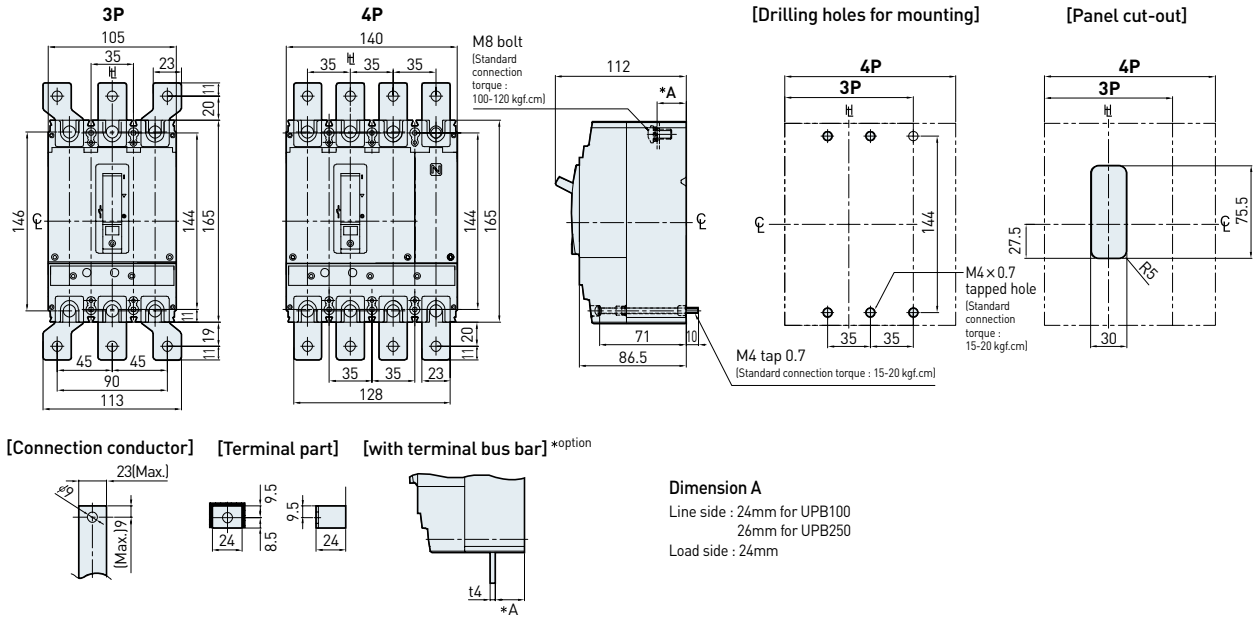

Dimension A

Line side : 24mm for UPB100
26mm for UPB250
Load side : 24mm

Plug-in mounting

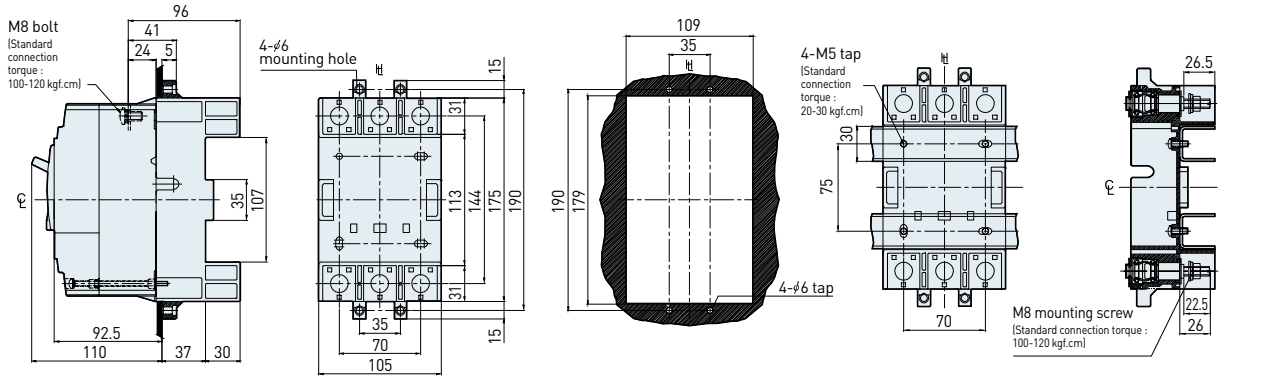

Installation of signal accessories

No. of poles	AUX Auxiliary switch	ALT Trip alarm switch	SHT Shunt trip	UVT Under voltage trip	AUX ALT	AUX SHT	AUX UVT	ALT SHT	ALT UVT	AUX ALT SHT	AUX ALT UVT
3											

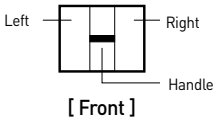

Characteristic Curves & Dimensions

| Q-class (for nuclear power plant application) / HBL type 100AF, 85kA |



- HBL103U
- HBL103UQ

Tripping & temperature derating curves

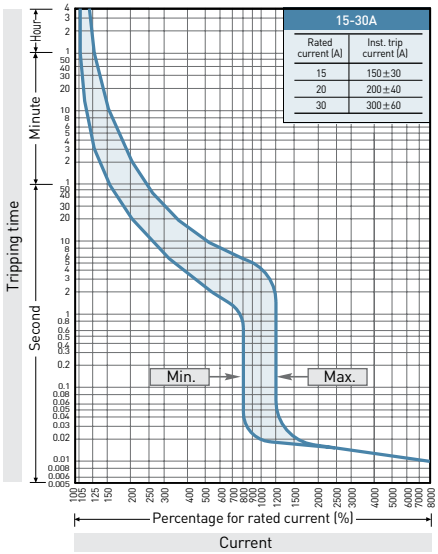

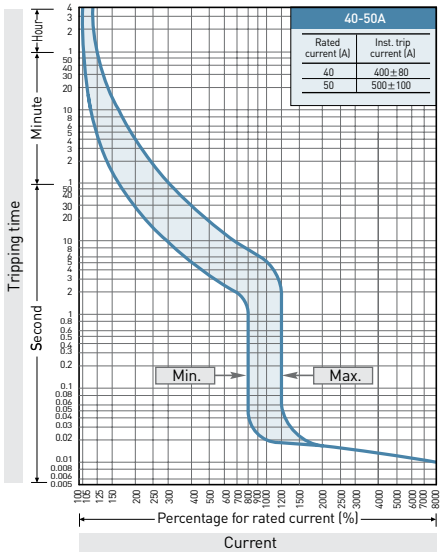

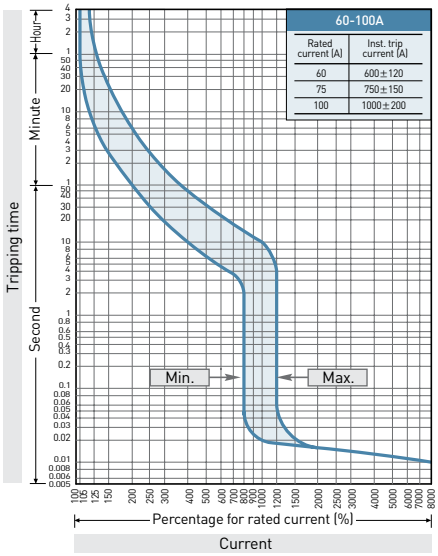

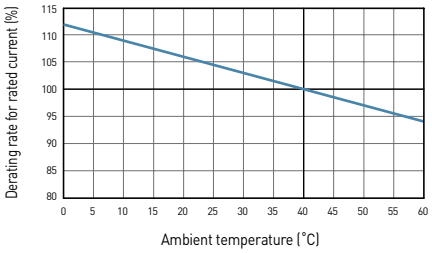

Installation of signal accessories

No. of poles	AUX Auxiliary switch	ALT Trip alarm switch	SHT Shunt trip	UVT Under voltage trip	AUX ALT	AUX SHT	AUX UVT	ALT SHT	ALT UVT	AUX ALT SHT	AUX ALT UVT
3											

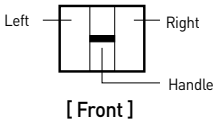

Dimensions

※ ℄ : Center line ⊬ : Handle center line • The allowance of 1.5mm is given around the handle frame. (Unit: mm)

Direct mounting

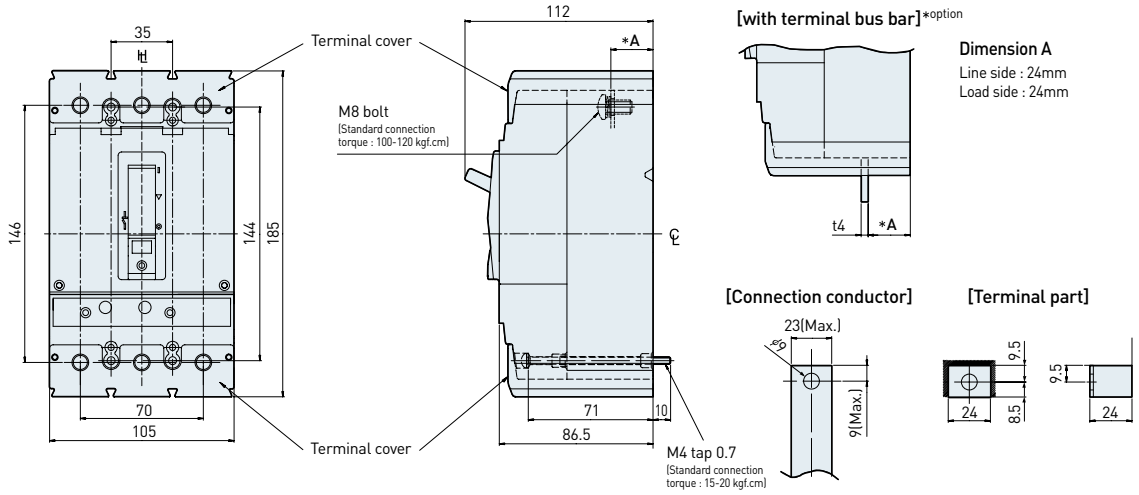

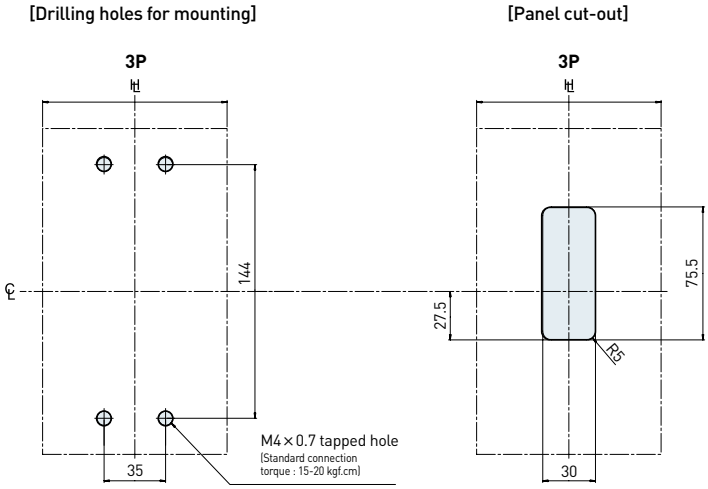

Characteristic Curves & Dimensions

| Q-class (for nuclear power plant application) / HBL type 100AF, 85kA / Motor protection |



- HBL103UM
- HBL103UMQ

Tripping curves

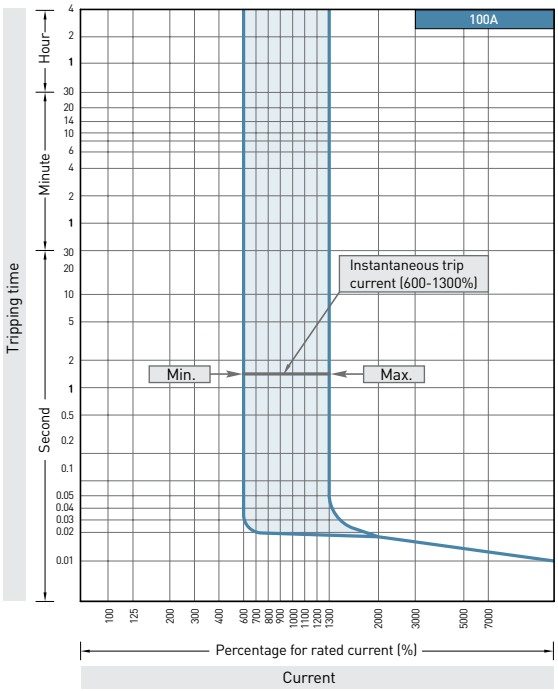

Instantaneous trip current

Rated current (A)	Multiple for rated current							
	6	7	8	9	10	11	12	13
2.5	15	17.5	20	22.5	25	27.5	30	32.5
3.2	19.2	22.4	25.6	28.8	32	35.2	38.4	41.6
6.3	37.8	44.1	50.4	56.7	63	69.3	75.6	81.9
12.5	75	87.5	100	112.5	125	137.5	150	162.5
20	120	140	160	180	200	220	240	260
32	192	224	256	288	320	352	384	416
50	300	350	400	450	500	550	600	650
63	378	441	504	567	630	693	756	819
80	480	560	640	720	800	880	960	1040
100	600	700	800	900	1000	1100	1200	1300

※ Tolerance for setting current: -20% - +30%

Installation of signal accessories

No. of poles	AUX Auxiliary switch	ALT Trip alarm switch	SHT Shunt trip	UVT Under voltage trip	AUX ALT	AUX SHT	AUX UVT	ALT SHT	ALT UVT	AUX ALT SHT	AUX ALT UVT
3											

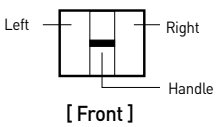

Dimensions

※ ℄ : Center line ⊬ : Handle center line • The allowance of 1.5mm is given around the handle frame. (Unit: mm)

Direct mounting

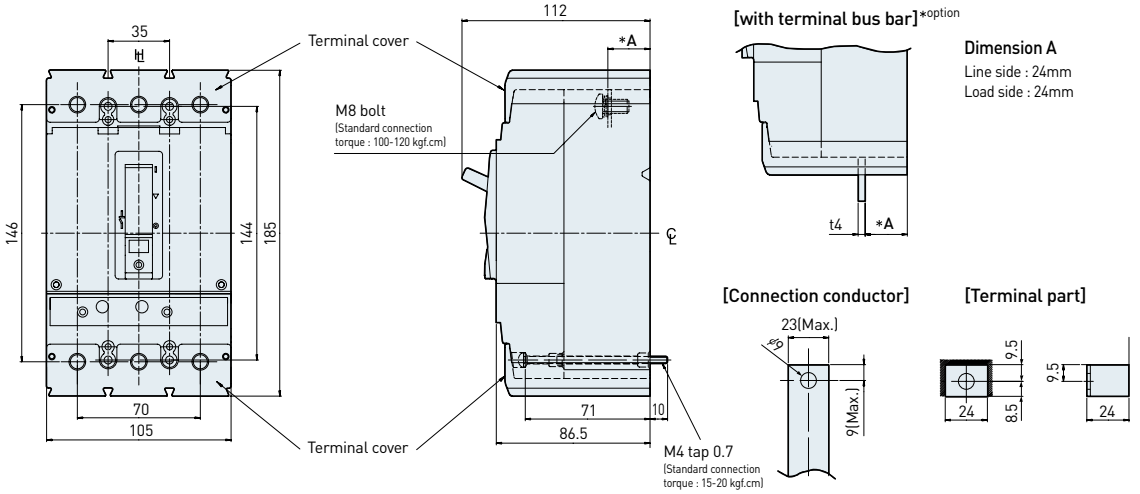

[Drilling holes for mounting]

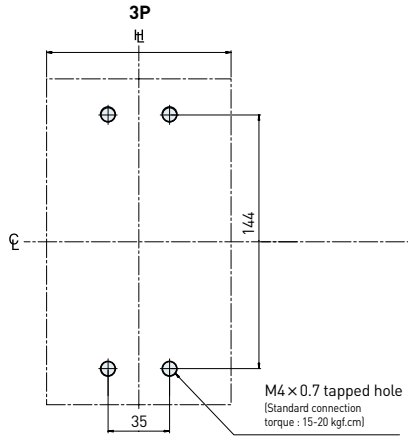

[Panel cut-out]

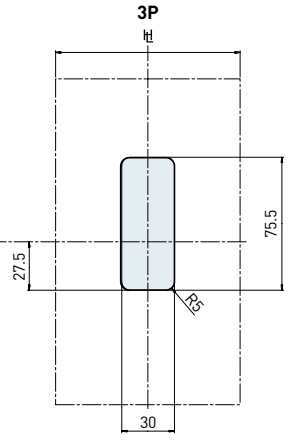

Characteristic Curves & Dimensions

| Q-class (for nuclear power plant application) / HBL type 225AF, 85kA |



- HBL203U
- HBL203UQ

Tripping & temperature derating curves

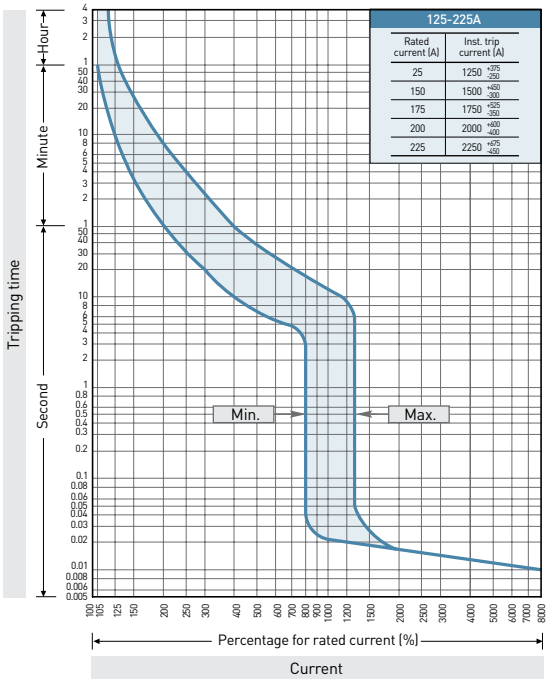

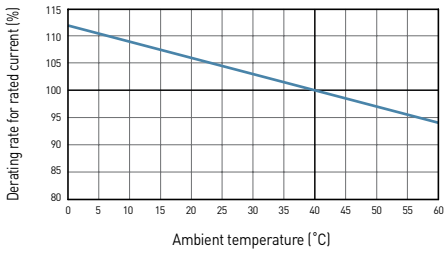

Installation of signal accessories

No. of poles	AUX Auxiliary switch	ALT Trip alarm switch	SHT Shunt trip	UVT Under voltage trip	AUX ALT	AUX SHT	AUX UVT	ALT SHT	ALT UVT	AUX ALT SHT	AUX ALT UVT
3											

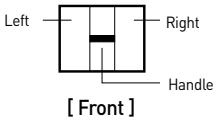

Dimensions

※ ℄ : Center line ⊬ : Handle center line • The allowance of 1.5mm is given around the handle frame. (Unit: mm)

Direct mounting

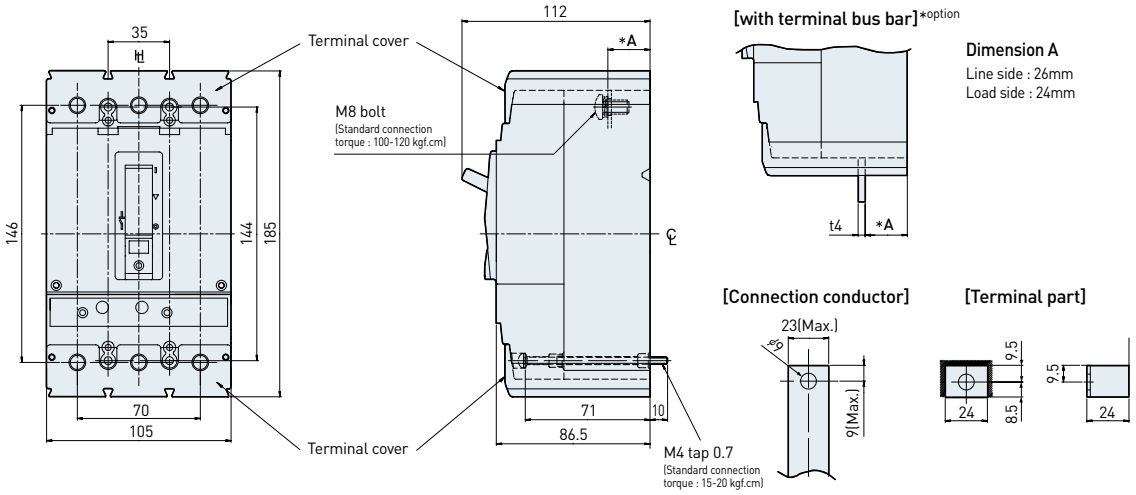

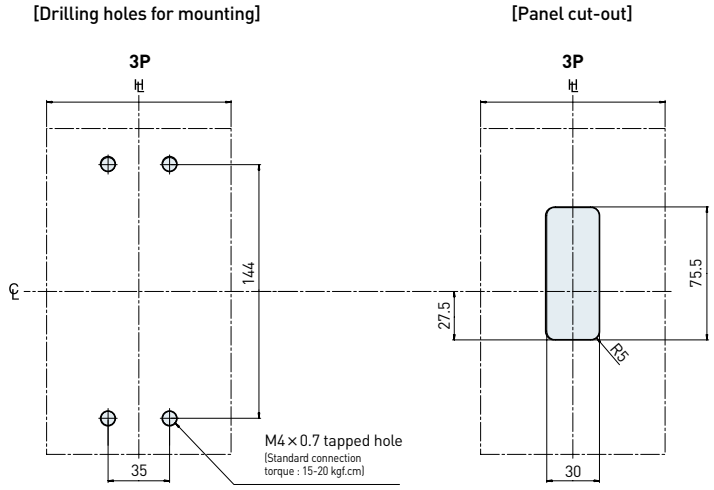

Characteristic Curves & Dimensions

| Q-class (for nuclear power plant application) / HBL type 225AF, 85kA / Motor protection |



- HBL203UM
- HBL203UMQ

Tripping curves

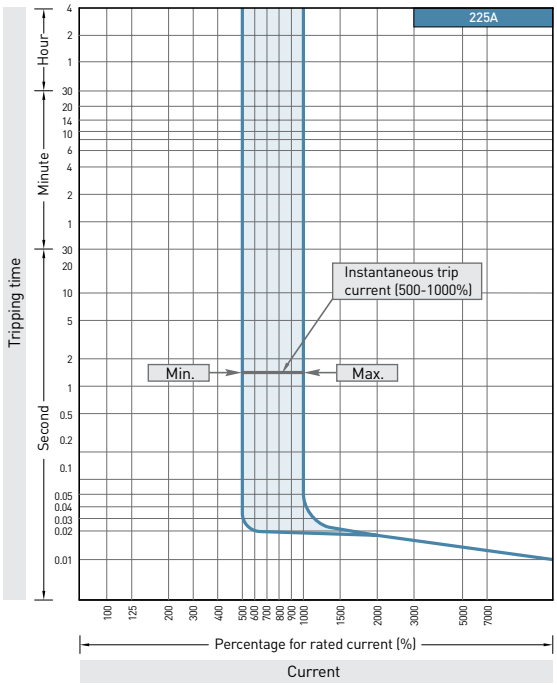

Instantaneous trip current

Rated current (A)	Multiple for rated current					
	5	6	7	8	9	10
125	625	750	875	1000	1125	1250
150	750	900	1050	1200	1350	1500
175	875	1050	1225	1400	1575	1750
200	1000	1200	1400	1600	1800	2000
225	1125	1350	1575	1800	2025	2250

※ Tolerance for setting current: -20% - +30%

Installation of signal accessories

No. of poles	AUX Auxiliary switch	ALT Trip alarm switch	SHT Shunt trip	UVT Under voltage trip	AUX ALT	AUX SHT	AUX UVT	ALT SHT	ALT UVT	AUX ALT SHT	AUX ALT UVT
3											

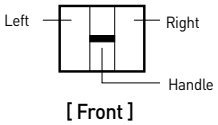

Dimensions

※ ℄ : Center line ⊢ : Handle center line • The allowance of 1.5mm is given around the handle frame. (Unit: mm)

Direct mounting

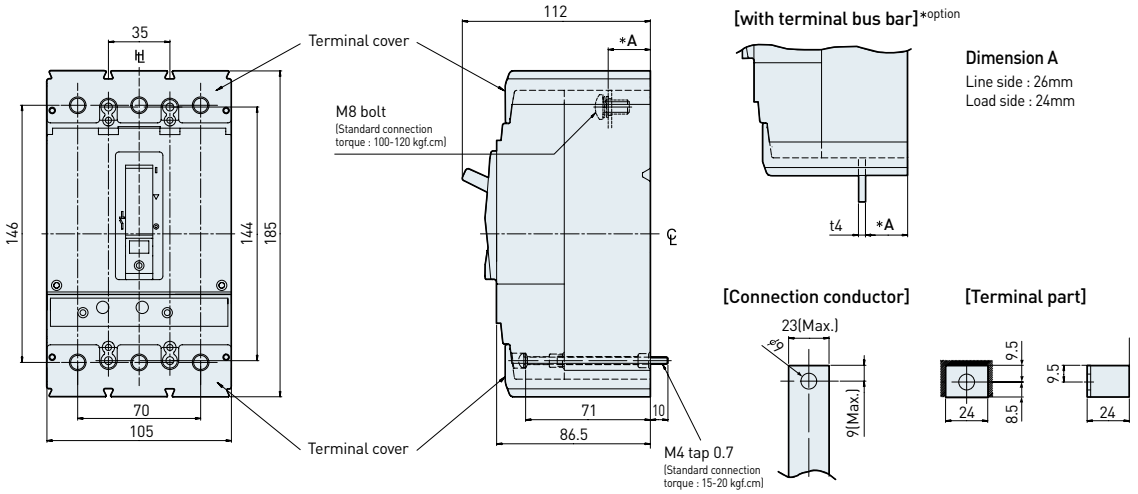

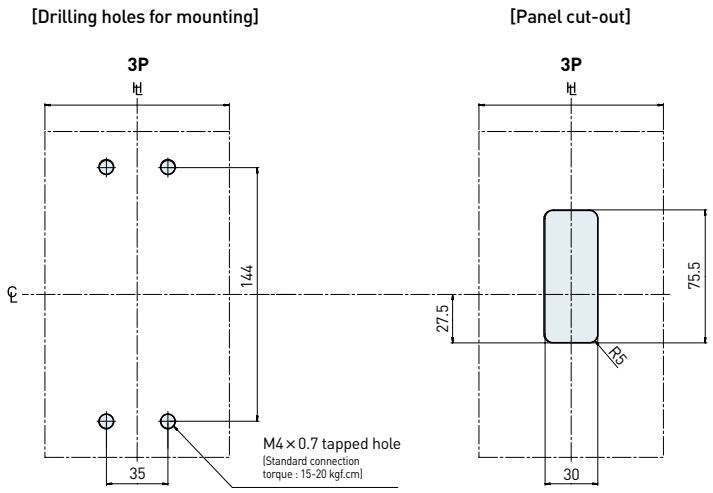

Characteristic Curves & Dimensions

| Miniature type / Molded case circuit breaker |



- UMB30Ra
- UMB30Rb

Tripping & temperature derating curves

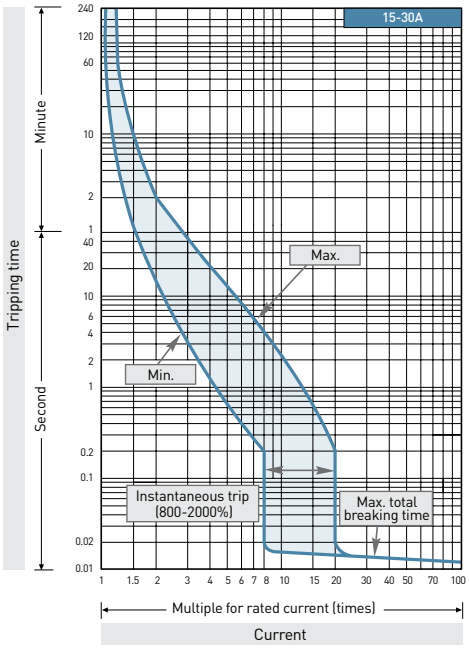

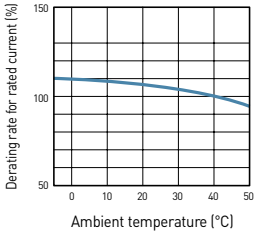

Dimensions

※ ℄ : Center line ℍ : Handle center line • The allowance of 1.5mm is given around the handle frame. (Unit: mm)

Direct mounting

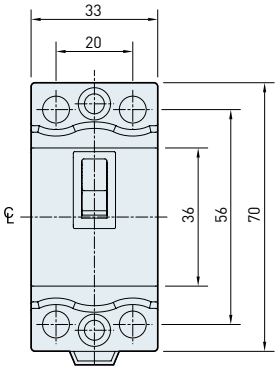

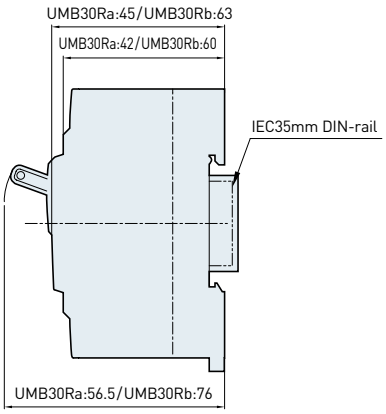

[Terminal part]

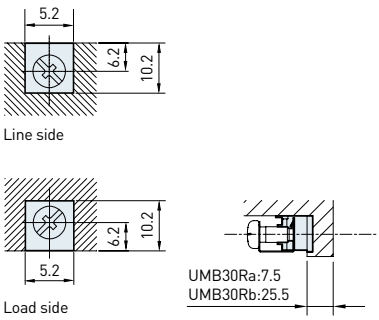

[Drilling holes for mounting]

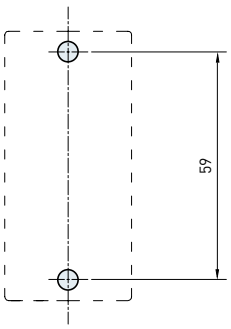

[Panel cut-out]

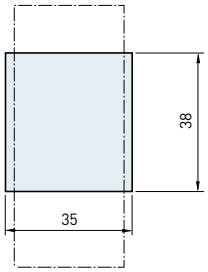



- UMB30Sg
- UMB50Sg

Tripping & temperature derating curves

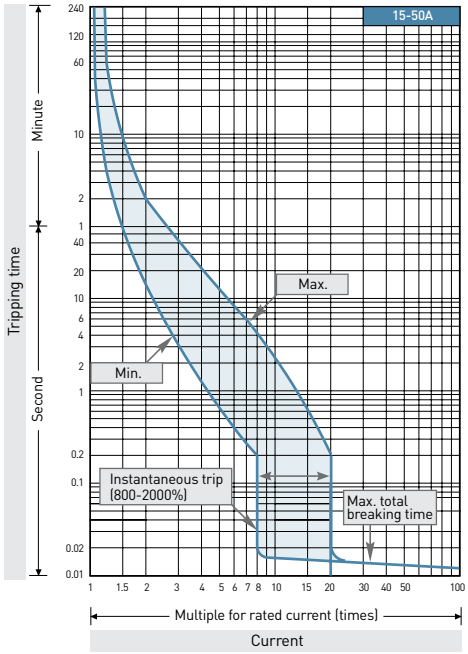

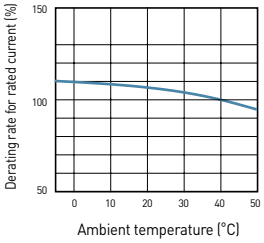

Dimensions

※ ℄ : Center line ℍ : Handle center line • The allowance of 1.5mm is given around the handle frame. (Unit: mm)

Direct mounting

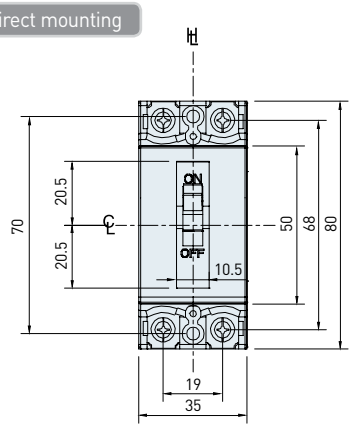

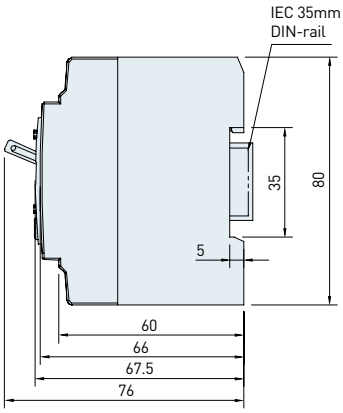

[Terminal part]

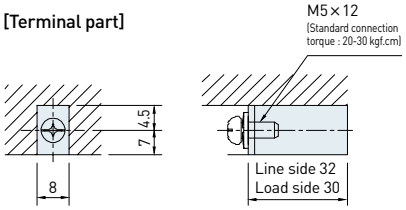

[Drilling holes for mounting]

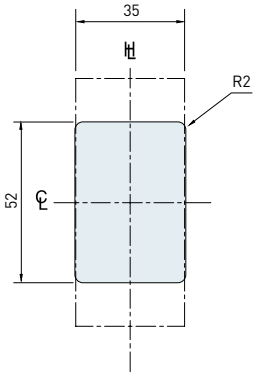

[Panel cut-out]

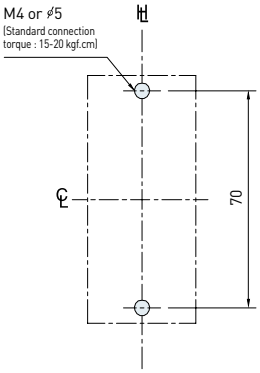

| Miniature type / Molded case circuit breaker |



- UMB30Hg
- UMB50Hg

Tripping & temperature derating curves

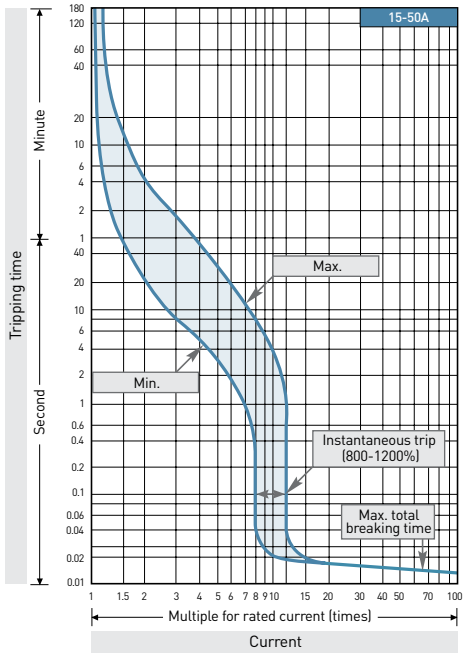

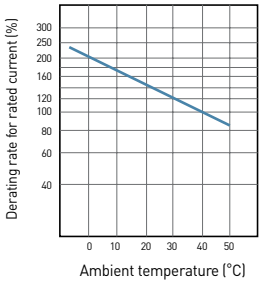

Dimensions

※ ℄ : Center line ℍ : Handle center line • The allowance of 1.5mm is given around the handle frame. (Unit: mm)

Direct mounting

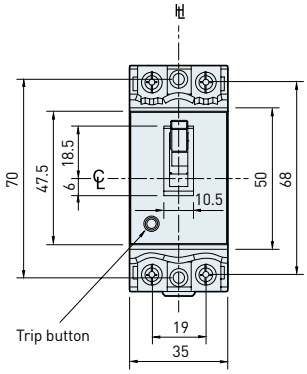

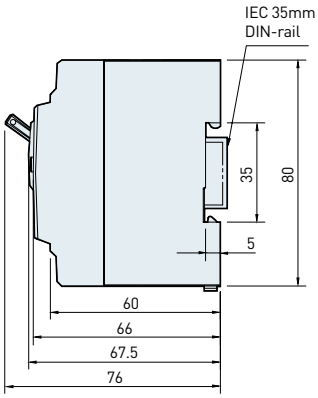

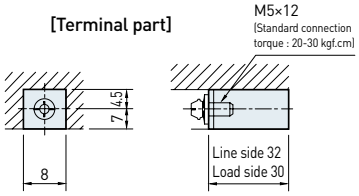

[Drilling holes for mounting]

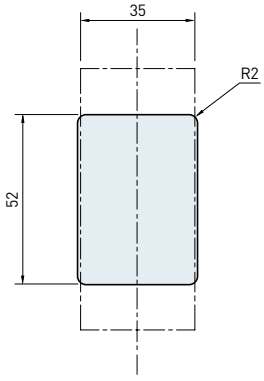

[Panel cut-out]

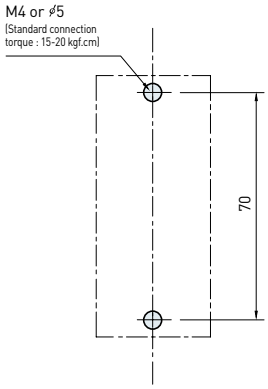



- UDB30S
- UDB30H
- UDB50S
- UDB50H
- UDB100S
- UDB100H

Tripping & temperature derating curves

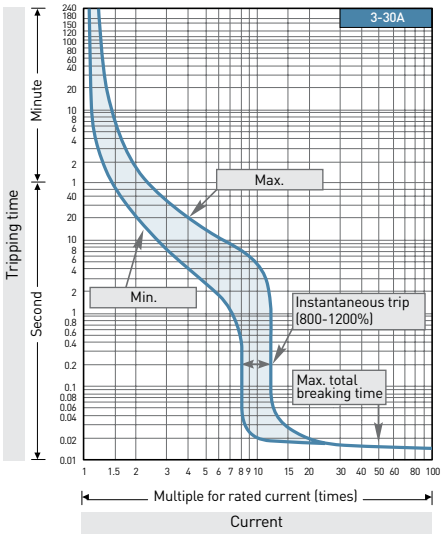

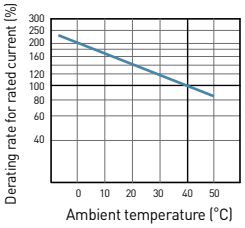

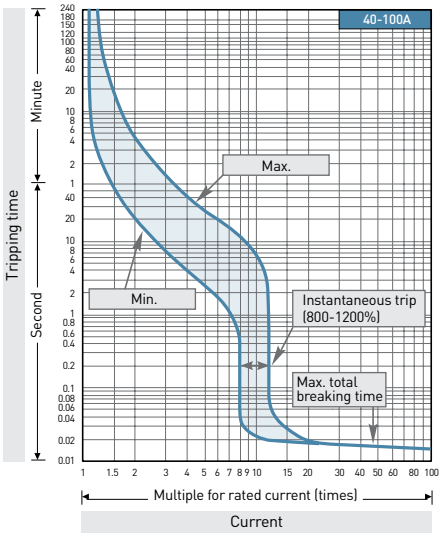

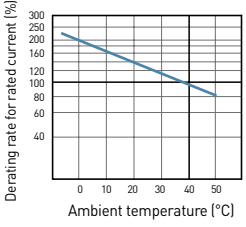

Installation of signal accessories

No. of poles	AUX Auxiliary switch	ALT Trip alarm switch	AXT	SHT Shunt trip	AUX + SHT	ALT + SHT	AUX ALT + SHT
3							

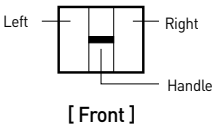

※ - In case of 2P, all signal accessories shall be installed in left side of breaker.
- SHT is not applicable to 2P.

Characteristic Curves & Dimensions

| Miniature type / Molded case circuit breaker |

Dimensions

※ ℄ : Center line 卄 : Handle center line • The allowance of 1.5mm is given around the handle frame. (Unit: mm)

Direct mounting UDB30, UDB50

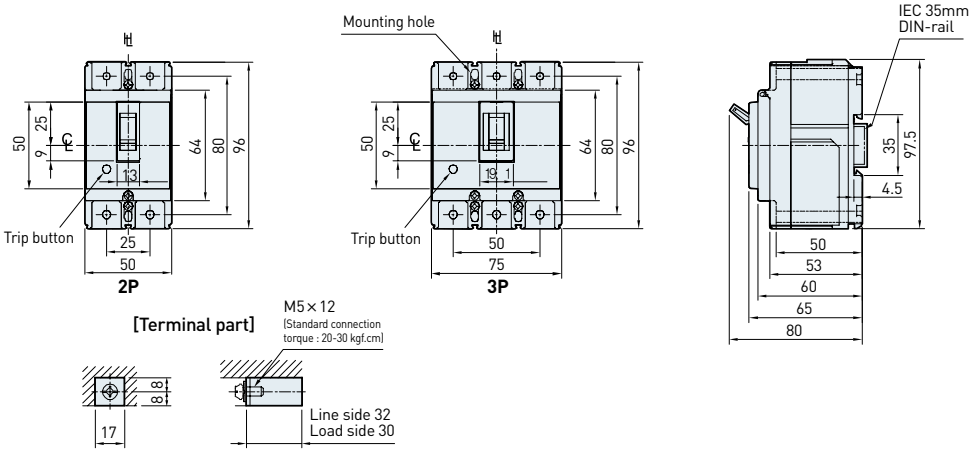

Direct mounting UDB100

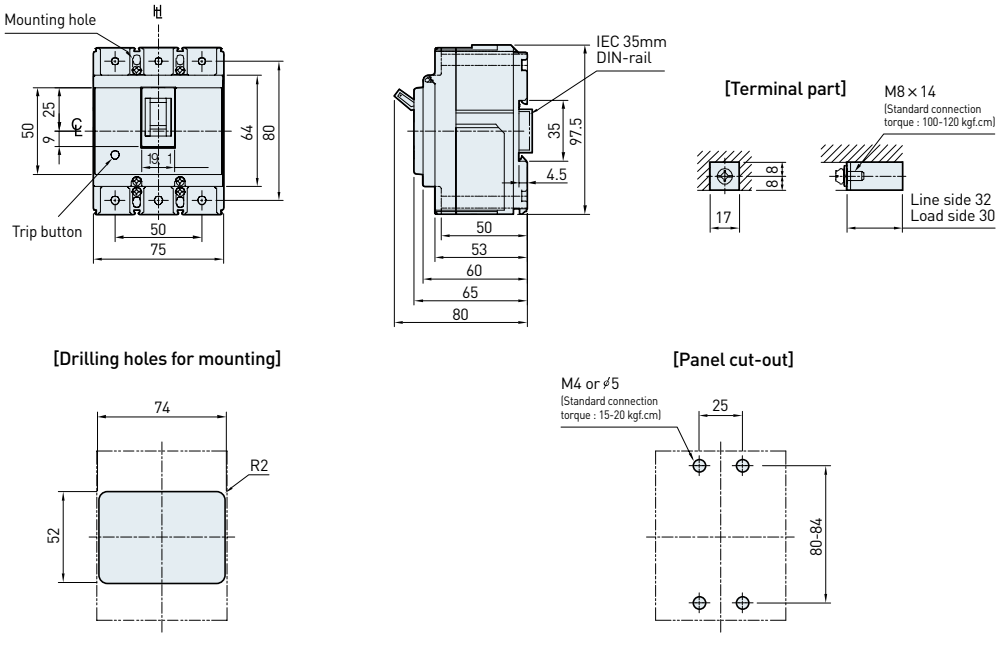



- UMG30Ca
- UMG30Cb
- UMG30Ra
- UMG30Rb

Tripping & temperature derating curves

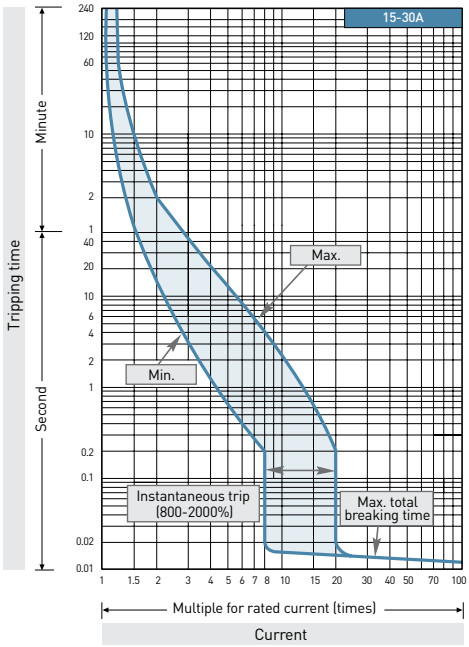

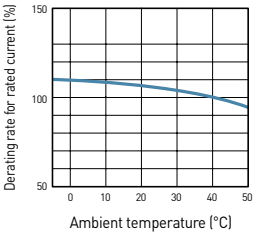

Dimensions

※ ℄ : Center line ℍ : Handle center line • The allowance of 1.5mm is given around the handle frame. (Unit: mm)

Direct mounting

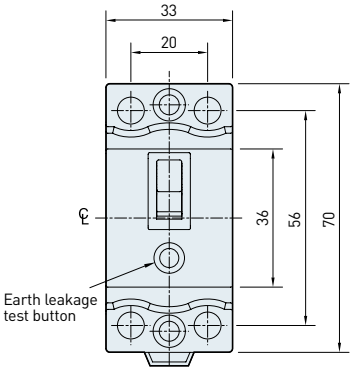

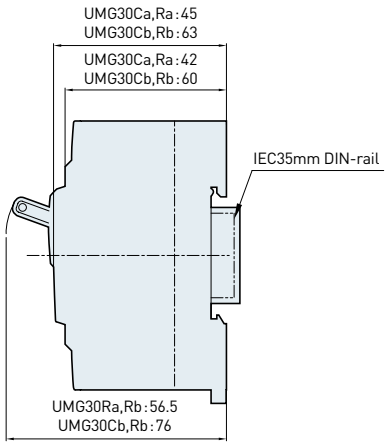

[Terminal part]

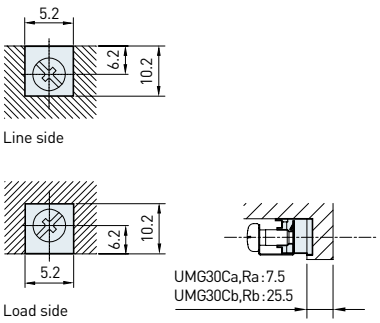

[Drilling holes for mounting]

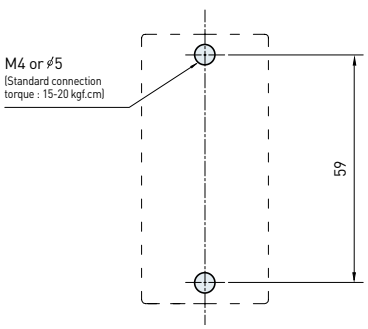

[Panel cut-out]

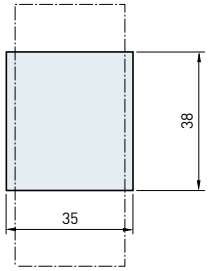

Characteristic Curves & Dimensions

| Miniature type / Earth leakage circuit breaker |



- UMG30Cd
- UMG30Rd

Tripping & temperature derating curves

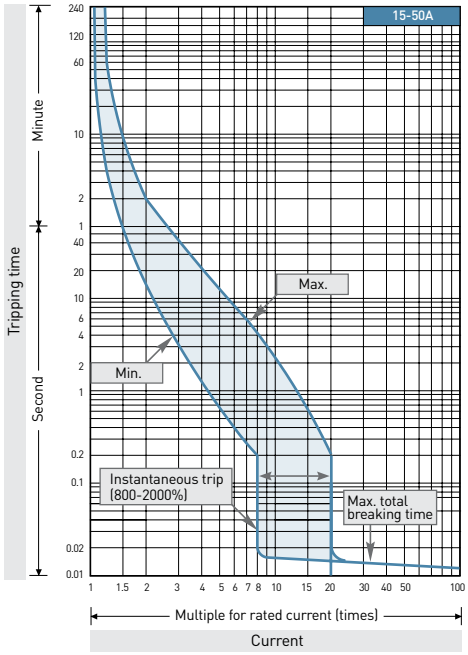

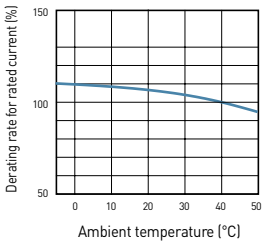

Dimensions

※ ℄ : Center line ℍ : Handle center line • The allowance of 1.5mm is given around the handle frame. (Unit: mm)

Direct mounting

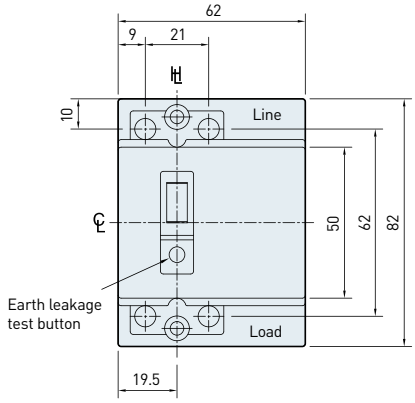

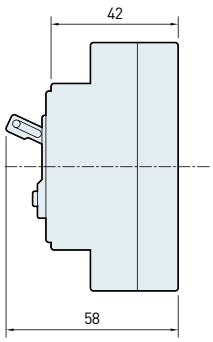

[Terminal part]

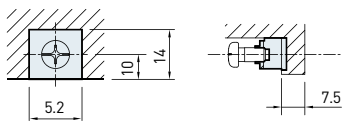

[Drilling holes for mounting]

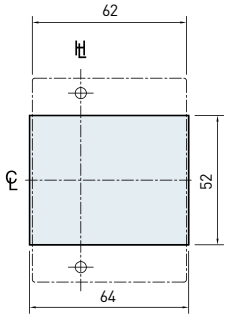

[Panel cut-out]

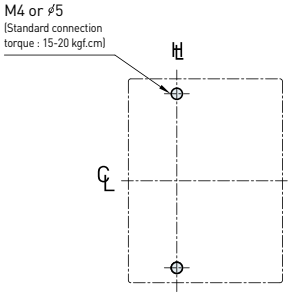



- UMG30Sg
- UMG30Hg
- UMG50Sg
- UMG50Hg

Tripping & temperature derating curves

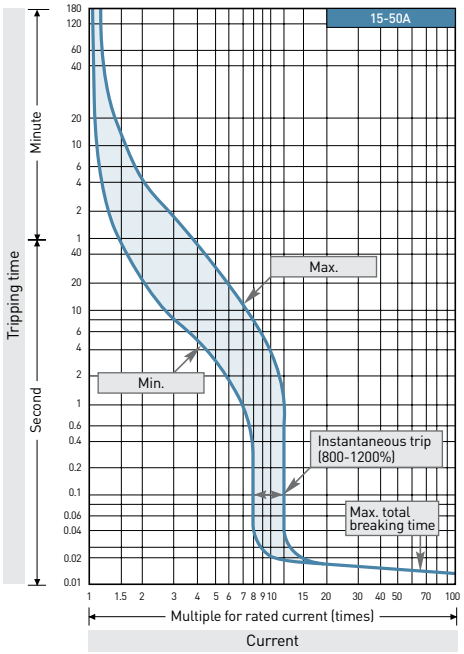

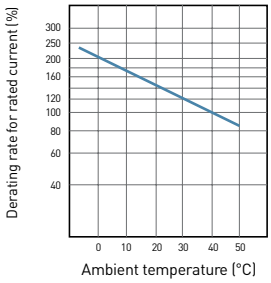

Dimensions

※ ℄ : Center line 卄 : Handle center line • The allowance of 1.5mm is given around the handle frame. (Unit: mm)

Direct mounting

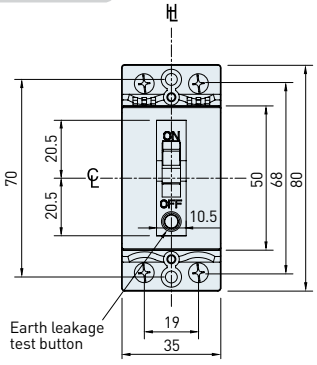

UMG30Sg / UMG50Sg

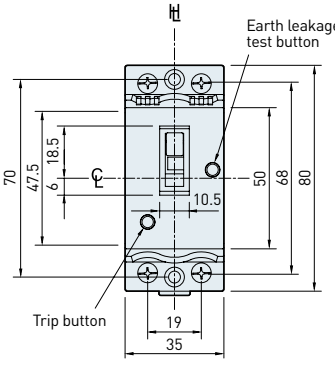

UMG30Hg / UMG50Hg

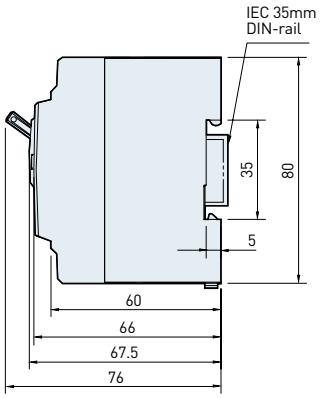

[Drilling holes for mounting]

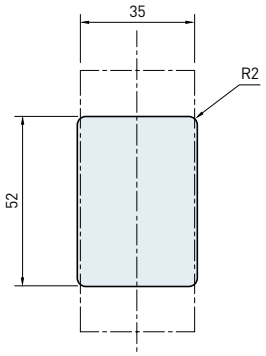

[Panel cut-out]

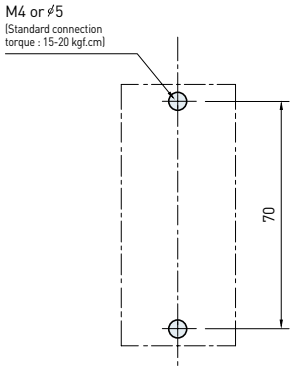

[Terminal part]

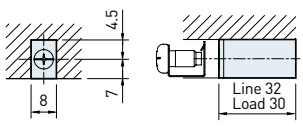

Characteristic Curves & Dimensions

| Miniature type / Earth leakage circuit breaker |



- UDG30S
- UDG30H
- UDG50S
- UDG50H
- UDG100S
- UDG100H

Tripping & temperature derating curves

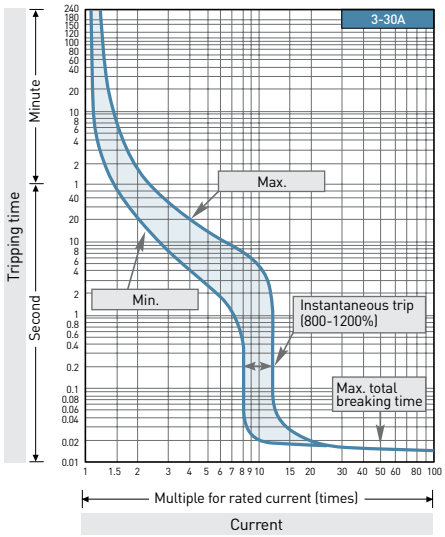

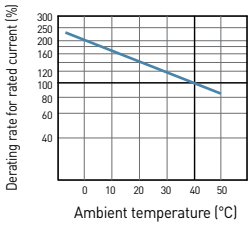

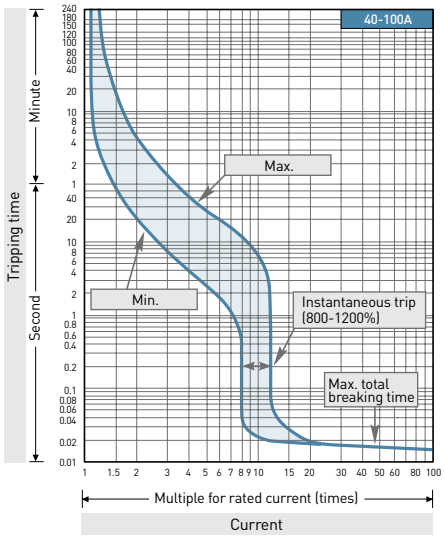

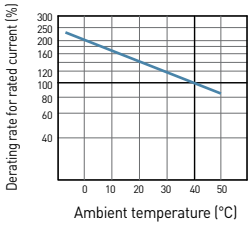

Installation of signal accessories

No. of poles	AUX Auxiliary switch	ALT Trip alarm switch	AXT
3			

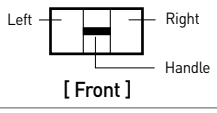

※ In case of 2P, all signal accessories shall be installed in left side of breaker.

Dimensions

※ ℄ : Center line ⊬ : Handle center line • The allowance of 1.5mm is given around the handle frame. (Unit: mm)

Direct mounting UGD30, UGD50

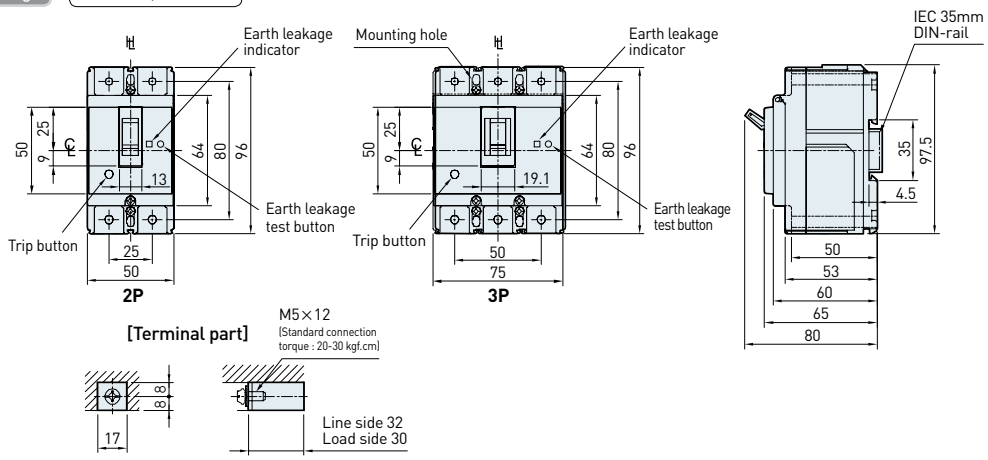

Direct mounting UGD100

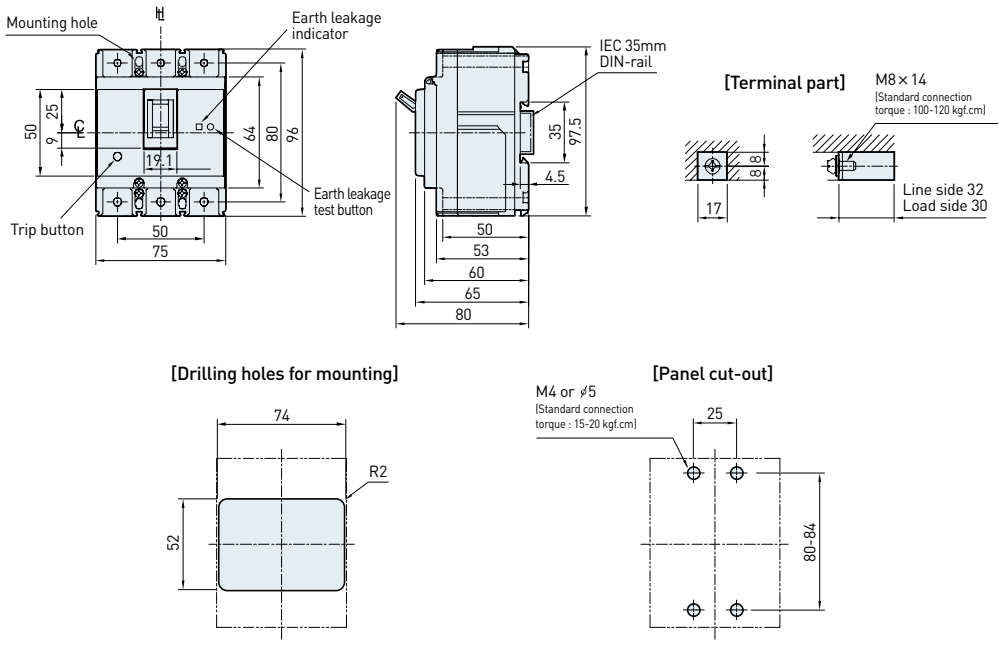

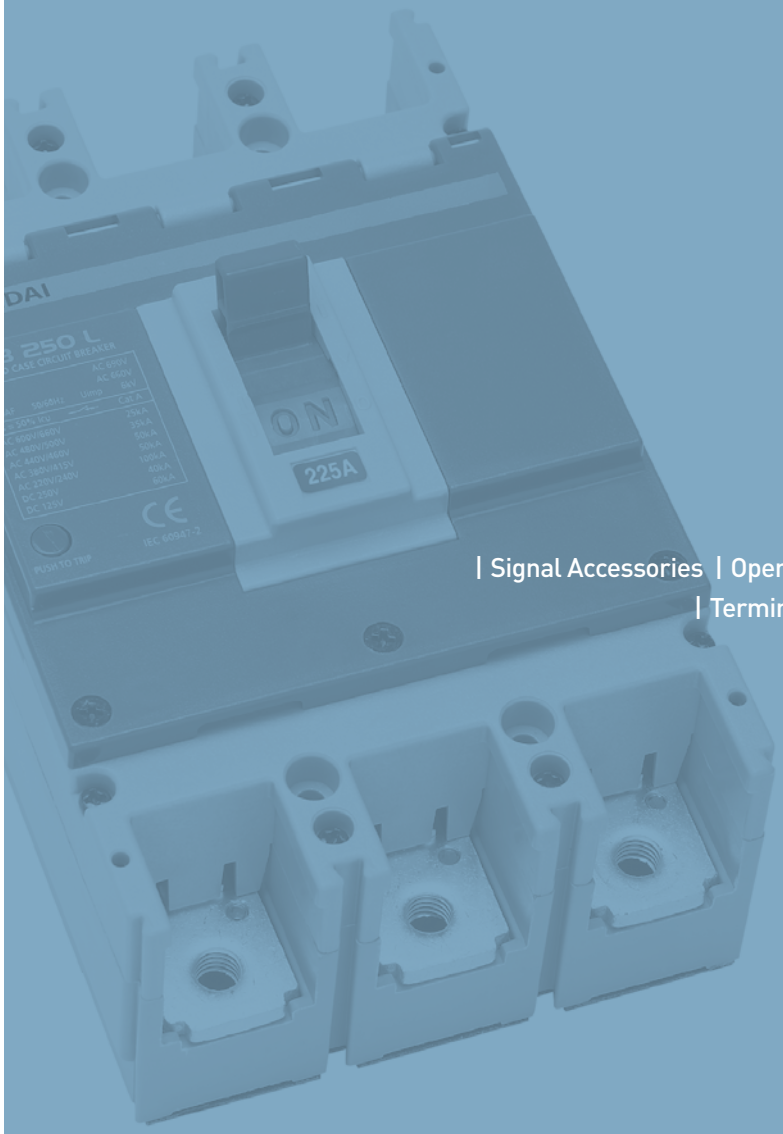

Accessories

| Signal Accessories | Operating Accessories | Mounting Accessories |
| Terminal Accessories | Portable Test Equipment |

〈 Accessories for UAB100 〉

| Signal accessories |
- auxiliary switch
- trip alarm switch
- shunt trip
- under voltage trip

| Operating accessories |
- operating handle (surface and extended type)
- motor operator
- mechanical interlock
- padlock plate
- extension handle

| Mounting accessories |
- DIN-rail adaptor
- mounting base for plug-in mounting

| Terminal accessories |
- terminal bus bar
- cage terminal block
- terminal cover
- interpole barrier

| Portable test equipment |
- MCCB trip unit tester

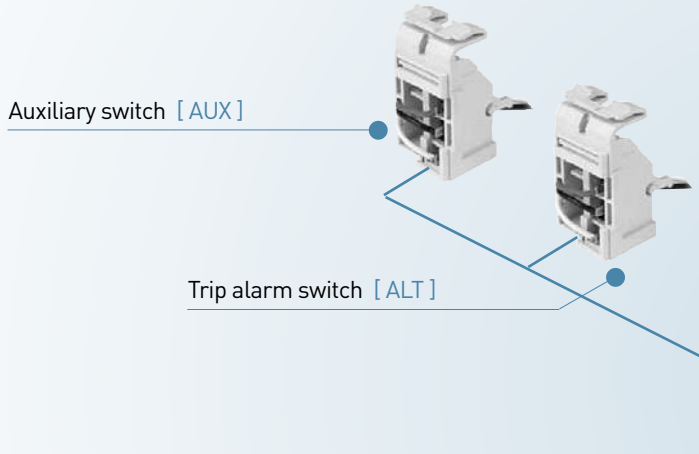

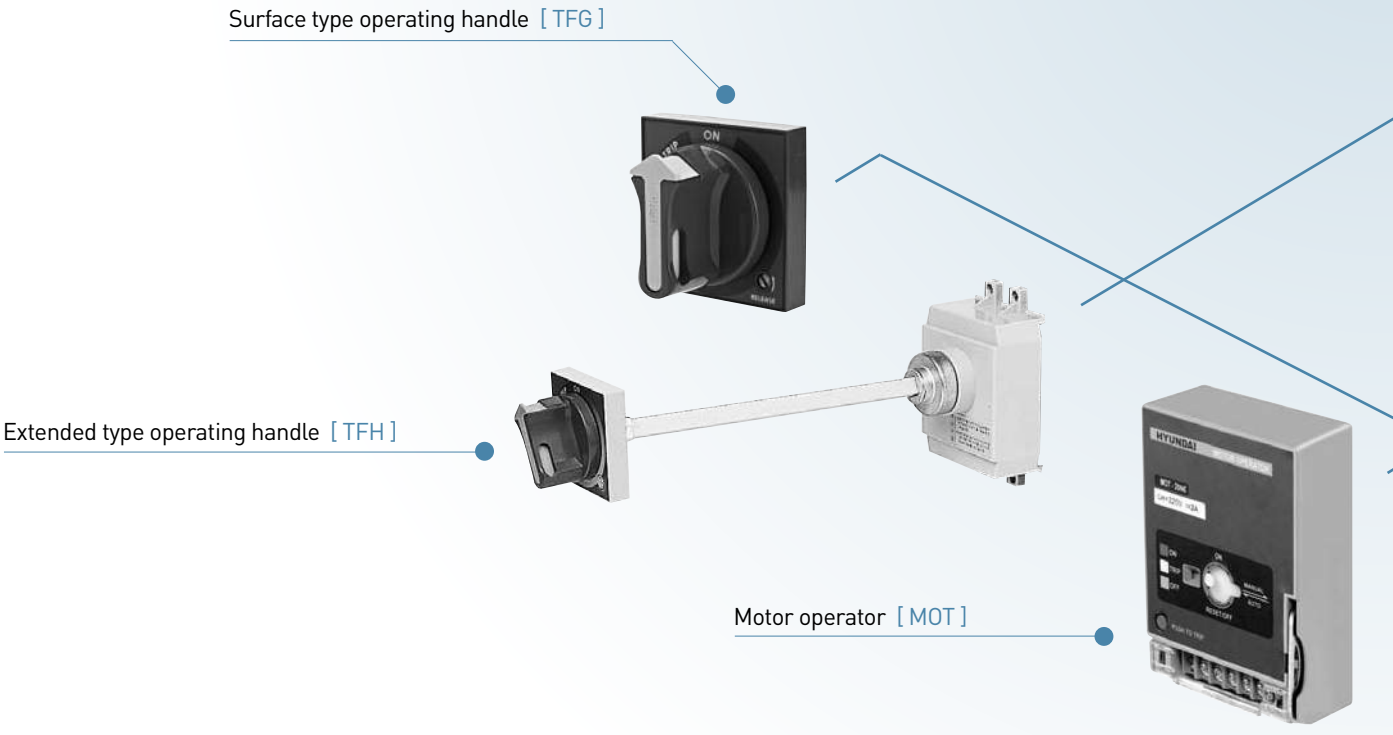

※The applicable accessories of each MCCB are not same as above. For exact application to each MCCB, please reter to next pages.

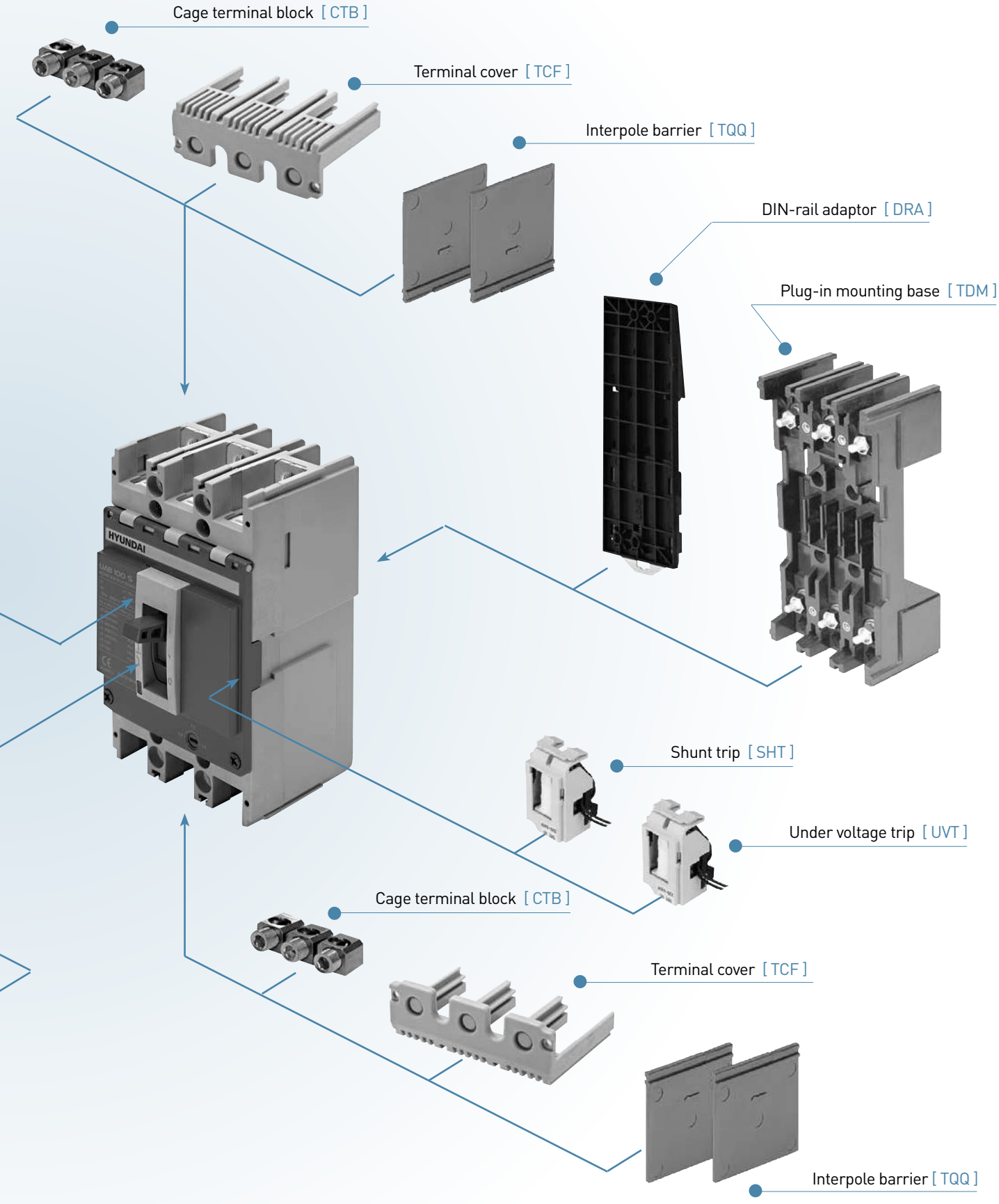
Cage terminal block [CTB]
Terminal cover [TCF]
Interpole barrier [TQQ]
DIN-rail adaptor [DRA]
Plug-in mounting base [TDM]
HYUNDAI
Shunt trip [SHT]
Under voltage trip [UVT]
Cage terminal block [CTB]
Terminal cover [TCF]
Interpole barrier [TQQ]

Signal Accessories

• Signal accessories adopts cassette type assembly method, so they can be easily installed and removed.



Auxiliary AUX

- Electrically indicates ON and OFF status of breaker



Trip alarm switch ALT

- Electrically indicates TRIP status of breaker

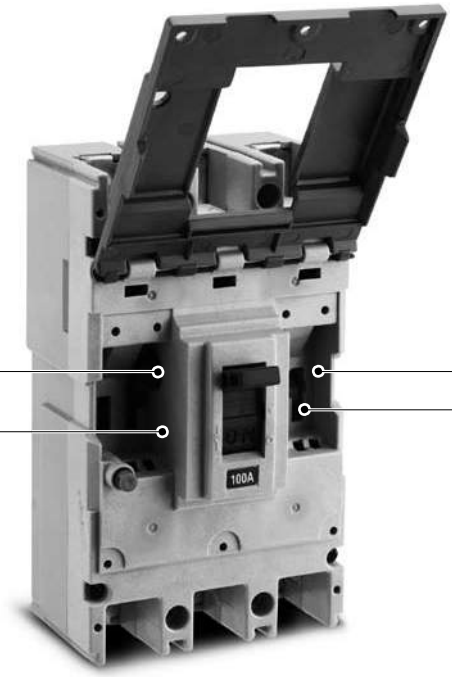



Shunt trip SHT

- Electrically trips breaker at remote place



Under voltage trip UVT

- Automatically trips breaker when control voltage drops below predetermined value

| Installation and wiring of signal accessories |

Item	Installation		Wiring
	3 pole	2 pole	
Auxiliary switch [AUX]			 1EA of 1ab type AUX
	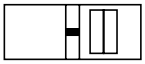		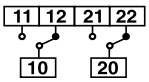 2EA of 1ab type AUX
	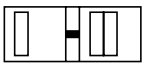		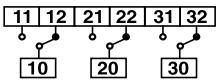 3EA of 1ab type AUX
	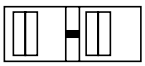		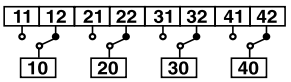 4EA of 1ab type AUX
Trip alarm switch [ALT]			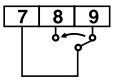 Trip
Shunt trip [SHT]	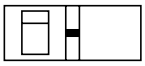		 Limit switch for coil protecton for SHT 10A H, SHT 10B H, SHT 20C H
	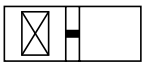		
Under voltage trip [UVT]			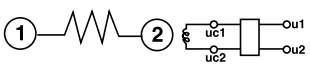

※ - For detail installation to each MCCB model, please refer to "Characteristic curves & Dimensions" from page 136 to 185.
1] Common for AC200-480V. Applicable for SHT 10A H, SHT 10B H and SHT 20C H only.
2] The coil is continuously energized, so that limit switch is not required.

| Operation of AUX and ALT |

MCCB Status	Auxiliary switch [AUX]	Trip alarm switch [ALT]
ON		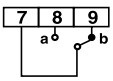
OFF		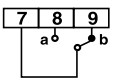
TRIP		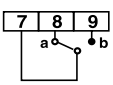

Signal Accessories

| Auxiliary switch (AUX) and trip alarm switch (ALT) |

Applicable MCCB	Auxiliary switch (AUX)		Trip alarm switch (ALT)		Category	
	Order code	Specification	Order code	Specification		
UAB30C, UAB30R, UAB50C, UAB50R, UAB60C, UAB60R, UAB100C / UAD50C	AUX 10A R1	1C, right-hand-side	ALT 10A R1	1C, right-hand-side	MCCB	MB
	AUX 10A R2	2C, right-hand-side				
UAB50S, UAB50H, UAB100R, UAB100S / UAD50S, UAD100R	AUX 10UA R1	1C, right-hand-side	ALT 10UA R1	1C, right-hand-side		
	AUX 10UA L1	1C, left-hand-side	ALT 10UA L1	1C, left-hand-side		
UCB50R, UCB100R, UCB100S / UCD100S	AUX 10B L1	1C, left-hand-side	ALT 10B L1	1C, left-hand-side		
UCB250R, UCB250S, UCB250N / UCD250S	AUX 20C L1	1C, left-hand-side	ALT 20C L1	1C, left-hand-side		
UCB50H, UCB50L, UCB100H, UCB100L, UCB160H, UCB160L, UCB250H, UCB250L / UCD50H, UCD100H, UCD160H, UCD250H	AUX 12FG L1	1C, left-hand-side	ALT 12FG R1	1C, right-hand-side		
	AUX 12FG L2	2C, left-hand-side	ALT 12FG L1	1C, left-hand-side		
UCB400R, UCB400S, UCB400H, UCB400L, UCB630R, UCB630S, UCB630H, UCB630L, UCB800R, UCB800S, UCB800H, UCB800L / UCD400S, UCD630S, UCD800S	AUX 46D R1	1C, right-hand-side	ALT 46D L1	1C, left-hand-side		
UCB1000S, UCB1000L, UCB1250S, UCB1250L / UCD1000S, UCD1250S	AUX 80NE R1	1C, right-hand-side	ALT 80NE R1	1C, right-hand-side		
	AUX 80NE R2	2C, right-hand-side				
	AUX 80NE R3	3C, right-hand-side				
UCB1600S	AUX 160NE R1	1C, right-hand-side	-	-		
	AUX 160NE R2	2C, right-hand-side				
UPB100S, UPB100H, UPB100L, UPB100X, UPB160S, UPB160H, UPB160L, UPB160X, UPB250S, UPB250H, UPB250L, UPB250X / UPD100S, UPD160S, UPD250S	AUX 12UP R1	1C, right-hand-side	ALT 12UP L1	1C, left-hand-side		
UPB400S, UPB400H, UPB400L, UPB400X, UPB630S, UPB630H, UPB630L, UPB630X / UPD400S, UPD630S	AUX 46UP L1	1C, left-hand-side	ALT 46UP R1	1C, right-hand-side		
HBL103U, HBL103UM, HBL203U, HBL203UM, HBL103UQ, HBL103UMQ, HBL203UQ, HBL203UMQ[1]	AUX 12UP R1	1C, right-hand-side	ALT 12UP L1	1C, left-hand-side		
UDB30S, UDB30H, UDB50S, UDB50H, UDB100S, UDB100H / UDG30S, UDG30H, UDG50S, UDG50H, UDG100S, UDG100H	AUX 10UD L1	1C, left-hand-side	ALT 10UD 2L1	1C, left-hand-side for 2 pole		
			ALT 10UD 2L1T[2]			
	AUX 10UD L1T[2]		ALT 10UD 3L1	1C, left-hand-side for 3 pole		
			ALT 10UD 3L1T[2]			

※ 1] Signal accessories for HBL type shall be installed in breaker before ex-working. 2] Terminal block type

| Shunt trip (SHT) |

Applicable MCCB	Order code / Exciting current (peak value)						Category	
	DC24V	DC100-110V	AC100-120V	AC200-230V	AC380-415V	AC440-480V		
UAB30C, UAB30R, UAB50C, UAB50R, UAB60C, UAB60R, UAB100C / UAD50C	SHT 10A A	SHT 10A C	SHT 10A F	SHT 10A H			MCCB	MB
	5.2A	1.1A	0.76A	0.28A				
UAB50S, UAB50H, UAB100R, UAB100S / UAD50S, UAD100R	SHT 10UA A	-	SHT 10UA F	SHT 10UA H	SHT 10UA B	SHT 10UA D		
	5.7A	-	0.88A	0.42A	0.42A	0.42A		
UCB50R, UCB100R, UCB100S / UCD100S	SHT 10B A	-	SHT 10B F	SHT 10B H				
	5.2A	-	0.76A	0.4A				
UCB250R, UCB250S, UCB250N / UCD250S	SHT 20C A	-	SHT 20C F	SHT 20C H				
	5.2A	-	0.76A	0.4A				
UCB50H, UCB50L, UCB100H, UCB100L, UCB160H, UCB160L, UCB250H, UCB250L / UCD50H, UCD100H, UCD160H, UCD250H	SHT 12FG A	SHT 12FG C	SHT 12FG F	SHT 12FG H	SHT 12FG B	SHT 12FG D		
	5.2A	2.2A	0.76A	0.4A	0.4A	0.4A		
UCB400R, UCB400S, UCB400H, UCB400L, UCB630R, UCB630S, UCB630H, UCB630L, UCB800R, UCB800S, UCB800H, UCB800L / UCD400S, UCD630S, UCD800S	SHT 46D A	SHT 46D C	SHT 46D F	SHT 46D H	SHT 46D B	SHT 46D D		
	0.01A	0.01A	0.012A	0.011A	0.01A	0.01A		
UCB1000S, UCB1000L, UCB1250S, UCB1250L / UCD1000S, UCD1250S	SHT 120NE A	SHT 120NE C	SHT 120NE F	SHT 120NE H	SHT 120NE B	SHT 120NE D		
	2A	0.11A	0.24A	0.23A	0.23A	0.23A		
UCB1600S	SHT 160NE A	SHT 160NE C	SHT 160NE F	SHT 160NE H	SHT 160NE B[1]	-		
	2A	1A	0.76A	0.4A	0.35A	-		
UPB100S, UPB100H, UPB100L, UPB100X, UPB160S, UPB160H, UPB160L, UPB160X, UPB250S, UPB250H, UPB250L, UPB250X / UPD100S, UPD160S, UPD250S	SHT 12UP A	SHT 12UP C	SHT 12UP F	SHT 12UP H	SHT 12UP B	SHT 12UP D		
	0.023A	0.023A	0.023A	0.023A	0.023A	0.023A		
UPB400S, UPB400H, UPB400L, UPB400X, UPB630S, UPB630H, UPB630L, UPB630X / UPD400S, UPD630S	SHT 46UP A	SHT 46UP C	SHT 46UP F	SHT 46UP H	SHT 46UP B	SHT 46UP D		
	0.023A	0.023A	0.023A	0.023A	0.023A	0.023A		
HBL103U, HBL103UM, HBL203U, HBL203UM, HBL103UQ, HBL103UMQ, HBL203UQ, HBL203UMQ[2]	SHT 12UP A	SHT 12UP C	SHT 12UP F	SHT 12UP H	SHT 12UP B	SHT 12UP D		
	0.023A	0.023A	0.023A	0.023A	0.023A	0.023A		
UDB30S, UDB30H, UDB50S, UDB50H, UDB100S, UDB100H	SHT 10UD A	SHT 10UD C	SHT 10UD F	SHT 10UD H	SHT 10UD B	SHT 10UD D		
	SHT 10UD AT[3]	SHT 10UD CT[3]	SHT 10UD FT[3]	SHT 10UD HT[3]	SHT 10UD BT[3]	SHT 10UD DT[3]		
	1.65A	0.36A	0.4A	0.2A	0.08A	0.1A		

※ - The permissible operating voltage: 85-110% of rated voltage for AC , 75-125% for DC.
1] SHT 160NE B is applicable for AC380V only. 2] Signal accessories for HBL type shall be installed in breaker before ex-working.
3] Terminal block type

| Under voltage trip (UVT) |

Applicable MCCB	Order code						Category	
	DC24V	DC100-110V	AC100-120V	AC200-230V	AC380-415V	AC440-480V		
UAB30C, UAB30R, UAB50C, UAB50R, UAB60C, UAB60R, UAB100C / UAD50C	* UVT 10A J	* UVT 10A L	* UVT 10A N	* UVT 10A P	* UVT 10A Q	* UVT 10A R	MCCB	MB
UAB50S, UAB50H, UAB100R, UAB100S / UAD50S, UAD100R	UVT 10UA J	UVT 10UA L	UVT 10UA N	UVT 10UA P	UVT 10UA Q	UVT 10UA R		
UCB50R, UCB100R, UCB100S / UCD100S	UVT 10B J	UVT 10B L	UVT 10B N	UVT 10B P	UVT 10B Q	UVT 10B R		
UCB250R, UCB250S, UCB250N / UCD250S	UVT 20C J	UVT 20C L	UVT 20C N	UVT 20C P	UVT 20C Q	UVT 20C R		
UCB50H, UCB50L, UCB100H, UCB100L, UCB160H, UCB160L, UCB250H, UCB250L / UCD50H, UCD100H, UCD160H, UCD250H	UVT 12FG J	UVT 12FG L	UVT 12FG N	UVT 12FG P	UVT 12FG Q	UVT 12FG R		
UCB400R, UCB400S, UCB400H, UCB400L, UCB630R, UCB630S, UCB630H, UCB630L, UCB800R, UCB800S, UCB800H, UCB800L / UCD400S, UCD630S, UCD800S	* UVT 46D J	* UVT 46D L	* UVT 46D N	* UVT 46D P	* UVT 46D Q	* UVT 46D R		
UCB1000S, UCB1000L, UCB1250S, UCB1250L / UCD1000S, UCD1250S	UVT 120NE J	UVT 120NE L	UVT 120NE N	UVT 120NE P	UVT 120NE Q	UVT 120NE R		
UCB1600S	-	-	-	UVT 160NE P	UVT 160NE Q[1]	UVT 160NE R[1]		
UPB100S, UPB100H, UPB100L, UPB100X, UPB160S, UPB160H, UPB160L, UPB160X, UPB250S, UPB250H, UPB250L, UPB250X / UPD100S, UPD160S, UPD250S	* UVT 12UP J	* UVT 12UP L	* UVT 12UP N	* UVT 12UP P	* UVT 12UP Q	* UVT 12UP R		
UPB400S, UPB400H, UPB400L, UPB400X, UPB630S, UPB630H, UPB630L, UPB630X / UPD400S, UPD630S	* UVT 46UP J	* UVT 46UP L	* UVT 46UP N	* UVT 46UP P	* UVT 46UP Q	* UVT 46UP R		
HBL103U, HBL103UM, HBL203U, HBL203UM, HBL103UQ, HBL103UMQ, HBL203UQ, HBL203UMQ[2]	* UVT 12UP J	* UVT 12UP L	* UVT 12UP N	* UVT 12UP P	* UVT 12UP Q	* UVT 12UP R		

※ - The permissible operating voltage: 85-110% of rated voltage for AC, 85~125% for DC. The tripping voltage: 20-70% of rated voltage.
- Be sure not to use UVT for the electrical interlock system.
* Reset is possible without power.
1) UVT 160NE Q is applicable for AC380V only, and UVT 160NE R is applicable for AC440V only.
2) Signal accessories for HBL type shall be installed in breaker before ex-working.

• UVT controller is supplied as standard for UVT 10A, UVT 10UA, UVT 10B, UVT 20C, UVT 12FG, UVT 46D J, UVT 12UP and UVT 46UP type.

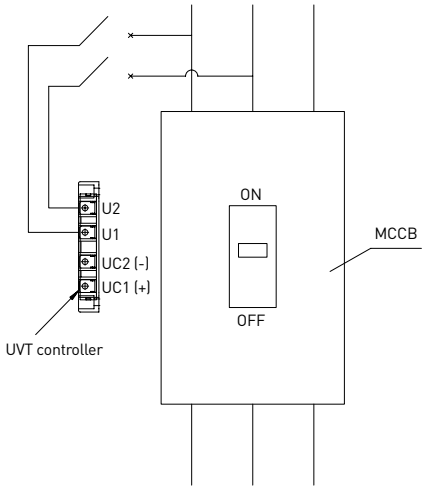

[Wiring]

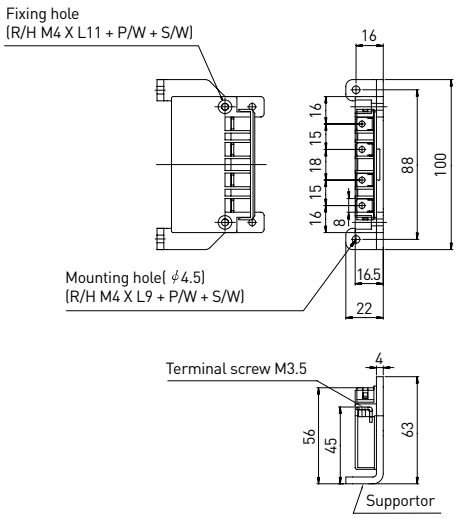

[Dimensions]

※ Terminal U1 an U2 are connected by the cable of vw-1, 22AWG (0.324㎟×700㎜).
Different cables are available on request.

※ Internal accessories do not support plug-in connection when installed seperately. Please contact us before order.

Operating Accessories

- Operating accessories offers convenience and safety in operation of breaker.

Operating handle TFG, TFH

- Enables manual operation of breaker without panel door-open
- Offers panel door-lock and reverse interlock function
- Satisfies IP54

Surface type / TFG



Extended type / TFH

- Useful in case that panel door is far from breaker
- Mechanism part is installed on front of breaker and connected with operating part by shaft

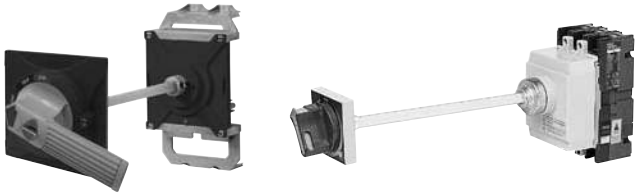

Motor operator MOT

- Enables automatic remote ON and OFF operation as well as manual operation
- Applied to electric supervision and control system
- Equips an emergency trip button in all range



Mechanical interlock MIF

- Mechanically prevents simultaneous closing of two breakers

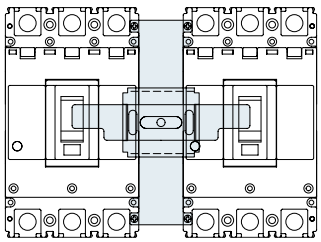

Padlock plate PLD

- Locks the breaker in OFF position

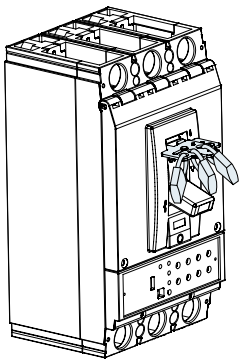

Extension handle THA

- Reduces strength in operation of breaker



| Operating handle (TFG/TFH) |

Applicable MCCB	Surface type (TFG)					Extended type (TFH)	
	S type			L type		S type	L type
	Upper[1] power supply type	Right[1] power supply type	Left[1] power supply type	Upper[1] power supply type	Left[1] power supply type		
UAB30C, UAB30R, UAB50C, UAB50R, UAB60C, UAB60R, UAB100C / UAD50C	TFG 10AS U4	TFG 10AS R4	TFG 10AS L4	TFG 10AL U4	TFG 10AL L4	TFH 10AS	TFH 10AL
UAB50S, UAB50H, UAB100R, UAB100S / UAD50S, UAD100R	TFG 10UAS U4	TFG 10UAS R4	TFG 10UAS L4	TFG 10UAL U4	TFG 10UAL L4	TFH 10UAS	TFH 10UAL
UCB50R, UCB100R, UCB100S / UCD100S	TFG 10BS U4	TFG 10BS R4	TFG 10BS L4	TFG 10BL U4	TFG 10BL L4	TFH 10BS	TFH 10BL
UCB250R, UCB250S, UCB250N / UCD250S	TFG 20CS U4	TFG 20CS R4	TFG 20CS L4	TFG 20CL U4	TFG 20CL L4	TFH 20CS	TFH 20CL
UCB50H, UCB50L, UCB100H, UCB100L / UCD50H, UCD100H	TFG 10UFS U4	TFG 10UFS R4	TFG 10UFS L4	TFG 10UFL U4	TFG 10UFL L4	TFH 10UFS	TFH 10UFL
UCB160H, UCB160L, UCB250H, UCB250L / UCD160H, UCD250H	TFG 20UGS U4	TFG 20UGS R4	TFG 20UGS L4	TFG 20UGL U4	TFG 20UGL L4	TFH 20UGS	TFH 20UGL
UCB400R, UCB400S, UCB400H, UCB400L, UCB630R, UCB630S, UCB630H, UCB630L, UCB800R, UCB800S, UCB800H, UCB800L / UCD400S, UCD630S, UCD800S	TFG 46DS U4	TFG 46DS R4	TFG 46DS L4	-	-	TFH 46DS	-
UCB1600S	-	-	-	-	-	TFH 160NE	-
UPB100S, UPB100H, UPB100L, UPB100X, UPB160S, UPB160H, UPB160L, UPB160X, UPB250S, UPB250H, UPB250L, UPB250X / UPD100S, UPD160S, UPD250S	TFG 12UPS U4	TFG 12UPS R4	TFG 12UPS L4	TFG 12UPL U4	TFG 12UPL L4	TFH 12UPS	TFH 12UPL
UPB400S, UPB400H, UPB400L, UPB400X, UPB630S, UPB630H, UPB630L, UPB630X / UPD400S, UPD630S	TFG 46UPS U4	TFG 46UPS R4	TFG 46UPS L4	-	-	TFH 46UPS	-
HBL103U, HBL103UM, HBL203U, HBL203UM	-	-	-	TFG 20U U4	TFG 20U L4	-	-
HBL103UQ, HBL103UMQ, HBL203UQ, HBL203UMQ	-	-	-	TFG 20UQ U4	TFG 20UQ L4	-	-

※ - In case of surface type (TFG), there are three types for diverse panel door-lock application, above mentioned codes are standard type. For detail, please refer to following explanation.
1] Upper, right and left indicates the power supply direction of MCCB.

Power supply direction of MCCB

- Surface type (TFG) operating handles are divided into three types by power supply direction of MCCB.

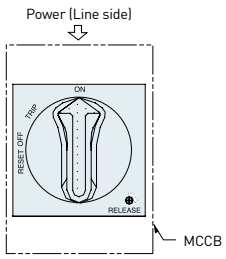

[Upper power supply type]

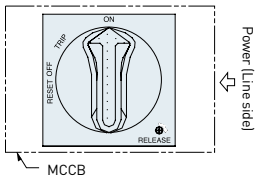

[Right power supply type]

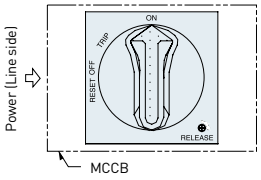

[Left power supply type]

※ ON, OFF and TRIP are not marked on real products.

Panel door-lock

- Surface type (TFG) operating handles offer four options in panel door-lock application.
  - OFF OPEN type: Panel door opens when operating handle is in OFF position. Indicating code (last digit of full order code) is 1. ex. TFG 10AS U1
  - OFF OPEN type with reverse interlock: Panel door opens when operating handle is in OFF position. Reverse interlock keeps MCCB not to be "ON" when panel door opens. This is standard type for 400-800AF MCCB and indicating code (last digit of full order code) is 2. ex.TFG 46DS U2
  - RESET OPEN type: Panel door opens when operating handle is in RESET position. Indicating code (last digit of full order code) is 3. ex.TFG 10AS U3
  - RESET OPEN type with reverse interlock: Panel door opens when operating handle is in RESET position. Reverse interlock keeps MCCB not to be "ON" when panel door opens. This is standard type for 30-250AF MCCB and indicating code (last digit of full order code) is 4. ex. TFG 46DS U4
- When panel door is required to open in ON position of operating handle, please turn the RELEASE knob to indicated direction and open the panel door.
- For more operating function, please refer to following pages.

Operating Accessories

Operation

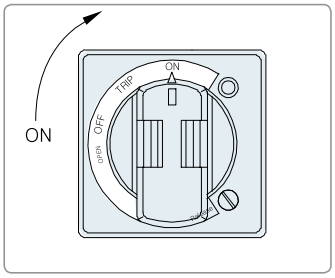

※ ON, OFF and TRIP are not marked on real products.

- Operating direction
  - Turn the handle in a clockwise direction for ON.

- Operation in panel door-closed
  - MCCB ON: Turn the handle to ON position. (Fig. 1)
  - MCCB OFF: Turn the handle to OFF position. (Fig. 2)
  - MCCB TRIP: When MCCB trips, handle turns to TRIP position automatically.
  - After MCCB trips, turn the handle to RESET position first and turn to ON position for MCCB ON. (Fig. 3 and Fig. 1)
  - When panel door is required to open in ON position of operating handle, please turn the RELEASE knob to indicated direction and open the panel door. (Fig. 4)

- Lock and release of panel door
  - When MCCB is in ON, OFF and TRIP status, both operating handle and panel door are locked.
  - When MCCB is in OFF and TRIP status, panel door can be opened by turning the handle to RESET position. (Fig. 3)
  - Panel door shall be locked automatically when you close the door in MCCB ON status. Please turn the handle to ON position before closing the door.

- Lock of operating handle
  - If required, you can lock operating handle in ON or OFF position with padlock (ϕ6-8 for S type, ϕ4-6 for L type). Padlock is not supplied. (Fig. 5)
  - When MCCB trips, handle turns to TRIP position automatically.

- Handle position shall be same with MCCB position (ON, OFF, TRIP) before closing the panel door.

Fig.1

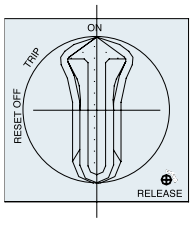

Fig.2

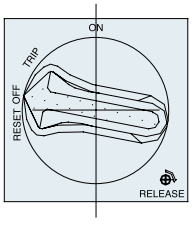

Fig.3

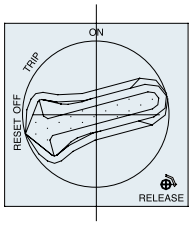

Fig.4

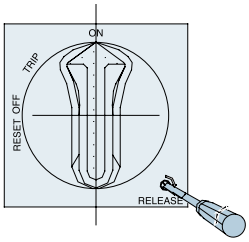

Fig.5

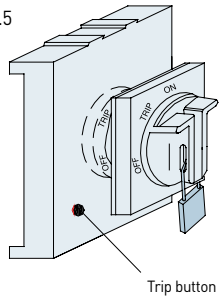

[S type]

Fig.1

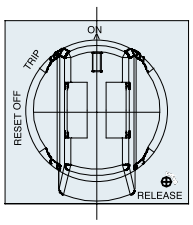

Fig.2

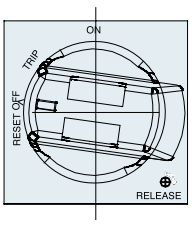

Fig.3

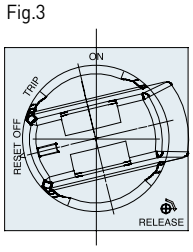

Fig.4

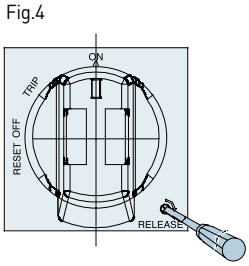

Fig.5

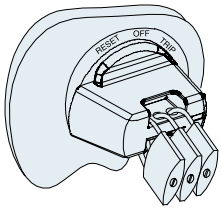

[L type]

※ ON, OFF and TRIP are not marked on real products.

Dimensions and standard order code / Surface type (TFG)

• 30-250AF S type

[Upper power supply type]

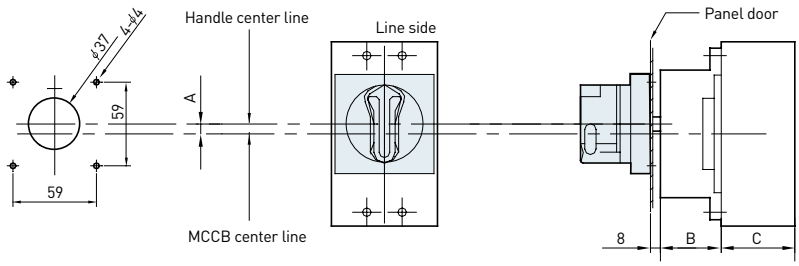

[Right power supply type]

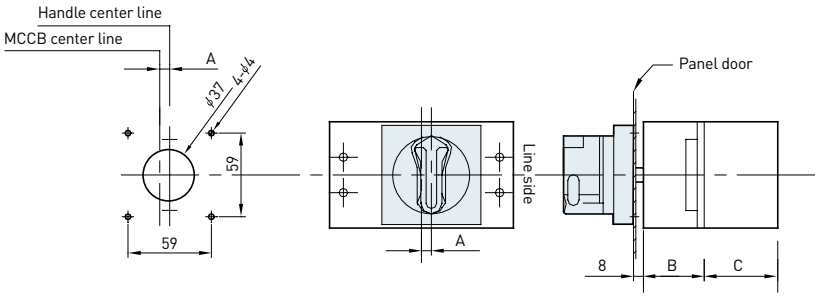

[Left power supply type]

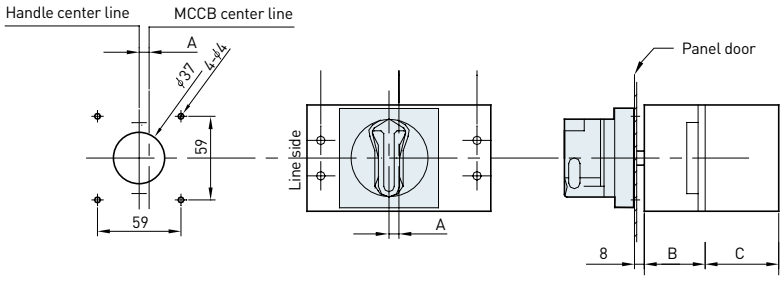

Applicable MCCB	Order code			Dimensions (mm)			Category	
	Upper power supply type	Right power supply type	Left power supply type	A	B	C		
UAB30C, UAB30R, UAB50C, UAB50R, UAB60C, UAB60R, UAB100C / UAD50C	TFG 10AS U4	TFG 10AS R4	TFG 10AS L4	7	43	56	MCCB	MB
UAB50S, UAB50H, UAB100R, UAB100S / UAD50S, UAD100R	TFG 10UAS U4	TFG 10UAS R4	TFG 10UAS L4	0	43	56		
UCB50R, UCB100R, UCB100S / UCD100S	TFG 10BS U4	TFG 10BS R4	TFG 10BS L4	9	47	56		
UCB250R, UCB250S, UCB250N / UCD250S	TFG 20CS U4	TFG 20CS R4	TFG 20CS L4	9	47	56		
UCB50H, UCB50L, UCB100H, UCB100L / UCD50H, UCD100H	TFG 10UFS U4	TFG 10UFS R4	TFG 10UFS L4	9	47	56		
UCB160H, UCB160L, UCB250H, UCB250L / UCD160H, UCD250H	TFG 20UGS U4	TFG 20UGS R4	TFG 20UGS L4	9	47	56		
UPB100S, UPB100H, UPB100L, UPB100X, UPB160S, UPB160H, UPB160L, UPB160X, UPB250S, UPB250H, UPB250L, UPB250X / UPD100S, UPD160S, UPD250S	TFG 12UPS U4	TFG 12UPS R4	TFG 12UPS L4	16.25	41	87		

Operating Accessories

• 30-250AF L type

[Upper power supply type]

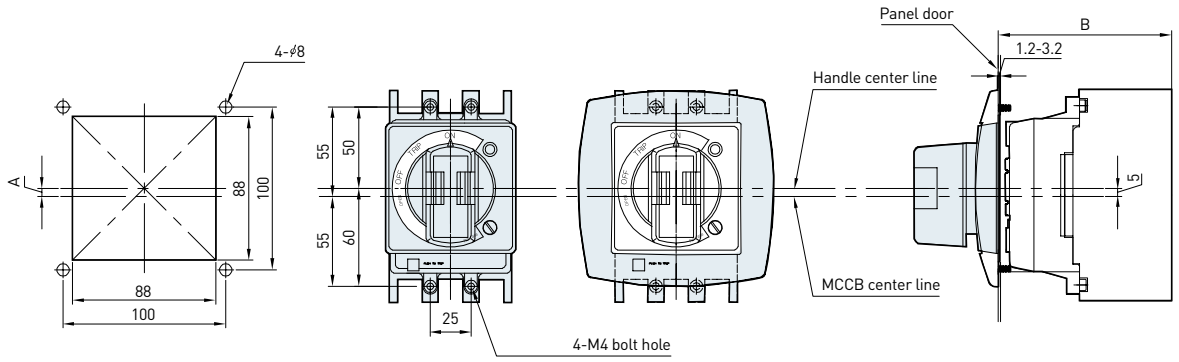

[Left power supply type]

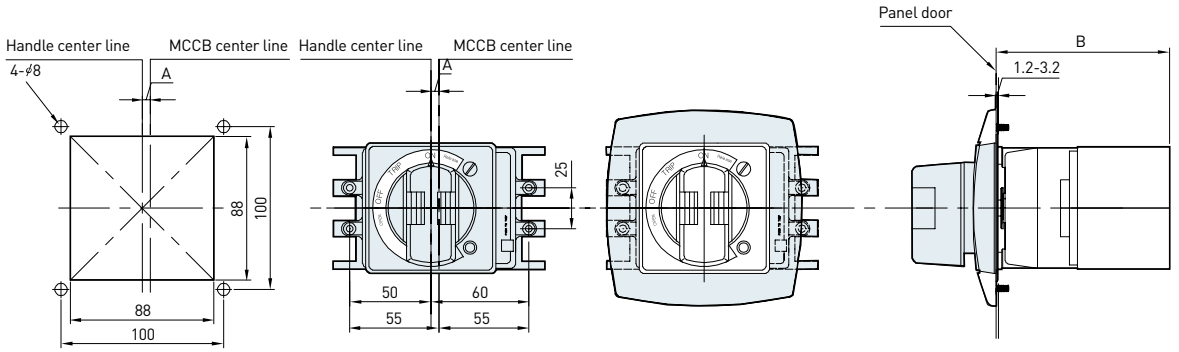

※ ON, OFF and TRIP are not marked on real products.

Applicable MCCB	Order code		Dimensions (mm)		Category	
	Upper power supply type	Left power supply type	A	B		
UAB30C, UAB30R, UAB50C, UAB50R, UAB60C, UAB60R, UAB100C / UAD50C	TFG 10AL U4	TFG 10AL L4	5	106-111	MCCB	MB
UAB50S, UAB50H, UAB100R, UAB100S / UAD50S, UAD100R	TFG 10UAL U4	TFG 10UAL L4	5	106-111		
UCB50R, UCB100R, UCB100S / UCD100S	TFG 10BL U4	TFG 10BL L4	9	111-116		
UCB250R, UCB250S, UCB250N / UCD250S	TFG 20CL U4	TFG 20CL L4	9	111-116		
UCB50H, UCB50L, UCB100H, UCB100L / UCD50H, UCD100H	TFG 10UFL U4	TFG 10UFL L4	9	111-116		
UCB160H, UCB160L, UCB250H, UCB250L / UCD160H, UCD250H	TFG 20UGL U4	TFG 20UGL L4	9	111-116		
UPB100S, UPB100H, UPB100L, UPB100X, UPB160S, UPB160H, UPB160L, UPB160X, UPB250S, UPB250H, UPB250L, UPB250X / UPD100S, UPD160S, UPD250S	TFG 12UPL U4	TFG 12UPL L4	14.5	136-140		

• 400-630AF S type

[Upper power supply type]

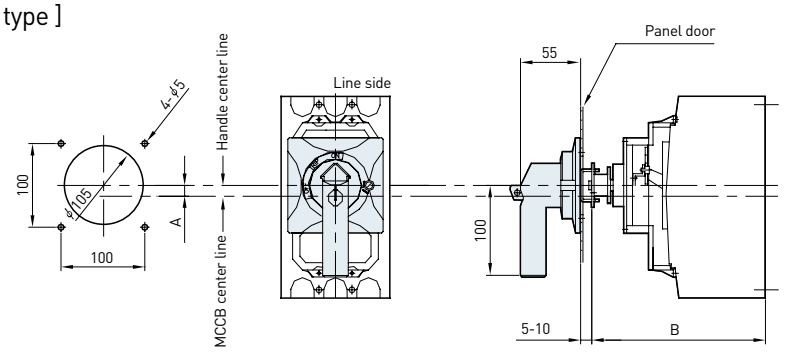

[Right power supply type]

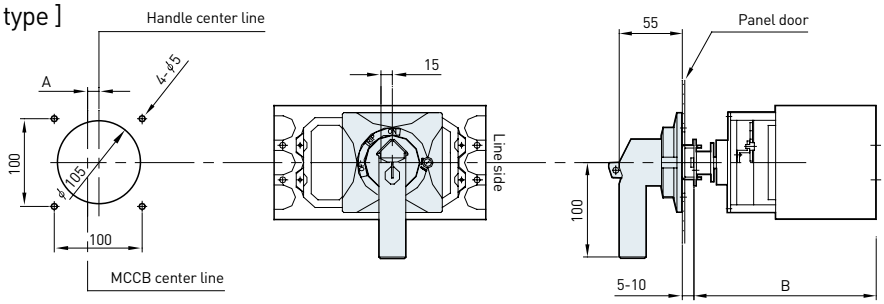

[Left power supply type]

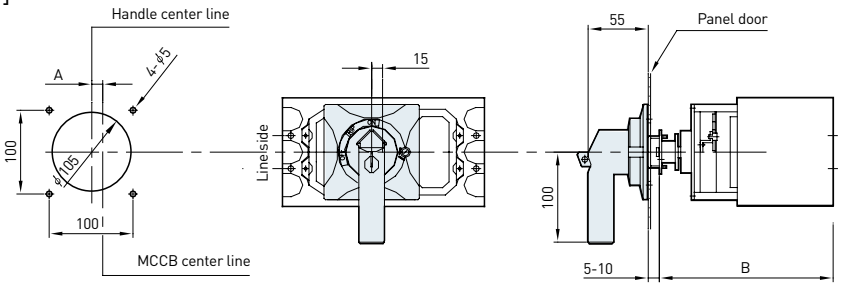

※ ON, OFF and TRIP are not marked on real products.

Applicable MCCB	Order code			Dimensions (mm)		Category	
	Upper power supply type	Right power supply type	Left power supply type	A	B		
UCB400R, UCB400S, UCB400H, UCB400L, UCB630R, UCB630S, UCB630H, UCB630L, UCB800R, UCB800S, UCB800H, UCB800L / UCD400S, UCD630S, UCD800S	TFG 46DS U4	TFG 46DS R4	TFG 46DS L4	0	222	MCCB	MB
UPB400S, UPB400H, UPB400L, UPB400X, UPB630S, UPB630H, UPB630L, UPB630X / UPD400S, UPD630S	TFG 46UPS U4	TFG 46UPS R4	TFG 46UPS L4	13	234		

Operating Accessories

Dimensions and standard order code / Extended type (TFH)

• 30-250AF S type

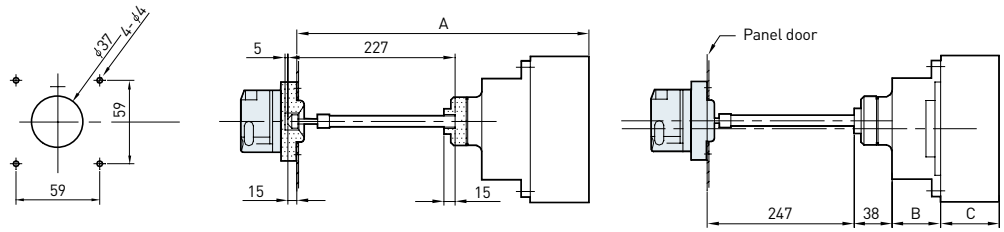

Applicable MCCB	Order code	Dimensions (mm)			Category	
		A	B	C		
UAB30C, UAB30R, UAB50C, UAB50R, UAB60C, UAB60R, UAB100C / UAD50C	TFH 10AS	384-479	43	56	MCCB	MB
UAB50S, UAB50H, UAB100R, UAB100S / UAD50S, UAD100R	TFH 10UAS	384-479	43	56		
UCB50R, UCB100R, UCB100S / UCD100S	TFH 10BS	388-383	47	56		
UCB250R, UCB250S, UCB250N / UCD250S	TFH 20CS	388-383	47	56		
UCB50H, UCB50L, UCB100H, UCB100L / UCD50H, UCD100H	TFH 10UFS	388-383	47	56		
UCB160H, UCB160L, UCB250H, UCB250L / UCD160H, UCD250H	TFH 20UGS	388-383	47	56		
UPB100S, UPB100H, UPB100L, UPB100X, UPB160S, UPB160H, UPB160L, UPB160X, UPB250S, UPB250H, UPB250L, UPB250X / UPD100S, UPD160S, UPD250S	TFH 12UPS	419-414	41	87		

• 30-250AF L type

[Upper power supply]

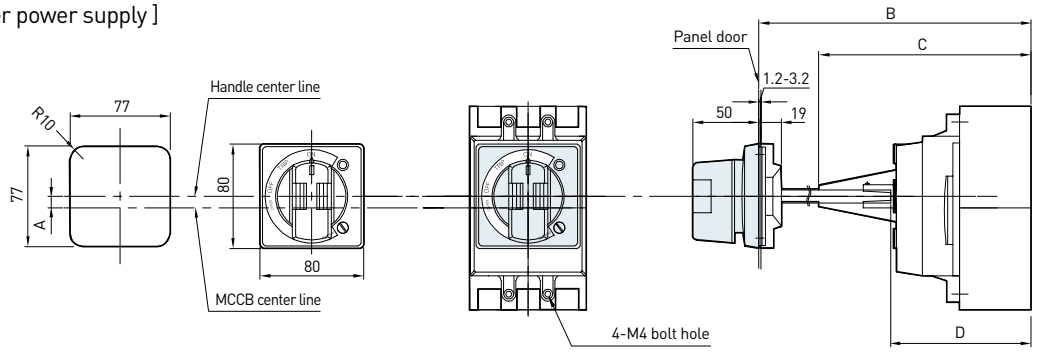

[Left power supply]

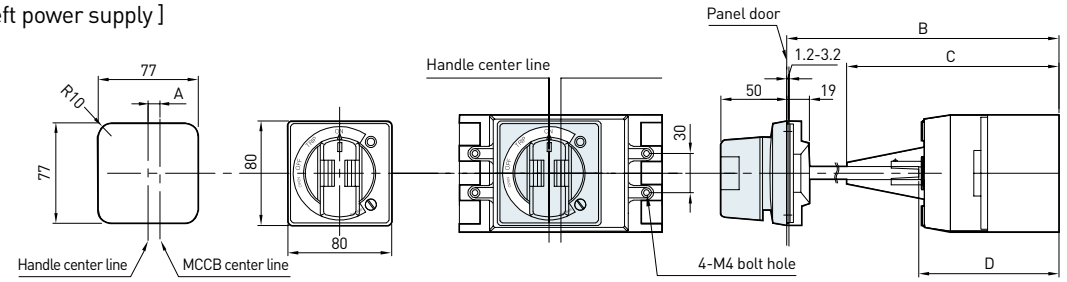

※ ON, OFF and TRIP are not marked on real products.

Applicable MCCB	Order code	Dimensions (mm)				Category	
		A	B	C	D		
UAB30C, UAB30R, UAB50C, UAB50R, UAB60C, UAB60R, UAB100C / UAD50C	TFH 10AL	5	210-360	160	106	MCCB	MB
UAB50S, UAB50H, UAB100R, UAB100S / UAD50S, UAD100R	TFH 10UAL	5	210-360	160	106		
UCB50R, UCB100R, UCB100S / UCD100S	TFH 10BL	9	210-360	164	110		
UCB250R, UCB250S, UCB250N / UCD250S	TFH 20CL	9	210-360	164	110		
UCB50H, UCB50L, UCB100H, UCB100L / UCD50H, UCD100H	TFH 10UFL	9	210-360	164	110		
UCB160H, UCB160L, UCB250H, UCB250L / UCD160H, UCD250H	TFH 20UGL	9	210-360	164	110		
UPB100S, UPB100H, UPB100L, UPB100X, UPB160S, UPB160H, UPB160L, UPB160X, UPB250S, UPB250H, UPB250L, UPB250X / UPD100S, UPD160S, UPD250S	TFH 12UPL	14.5	210-360	186	135		

• 400-630AF S type

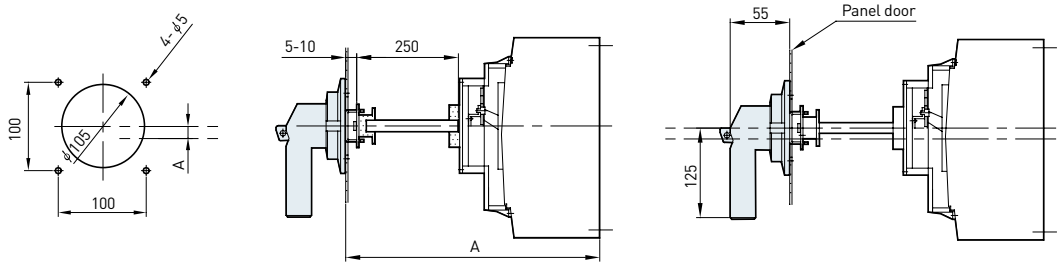

Applicable MCCB	Order code	Dimensions (mm)	Category	
		A		
UCB400R, UCB400S, UCB400H, UCB400L, UCB630R, UCB630S, UCB630H, UCB630L, UCB800R, UCB800S, UCB800H, UCB800L / UCD400S, UCD630S, UCD800S	TFH 46DS	428	MCCB	MB
UPB400S, UPB400H, UPB400L, UPB400X, UPB630S, UPB630H, UPB630L, UPB630X / UPD400S, UPD630S	TFH 46UPS	440		

Operating Accessories

Dimensions and standard order code / Q-class (for nuclear power plant application)

• Surface type (TFG)

[Upper power supply type]

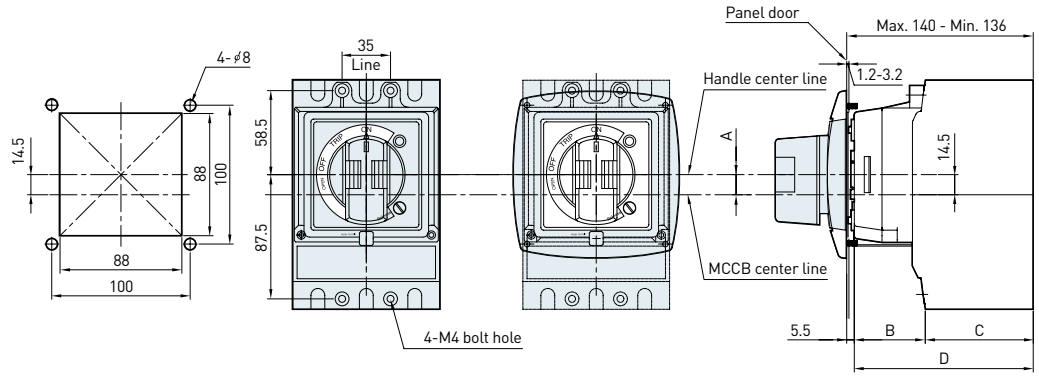

[Left power supply type]

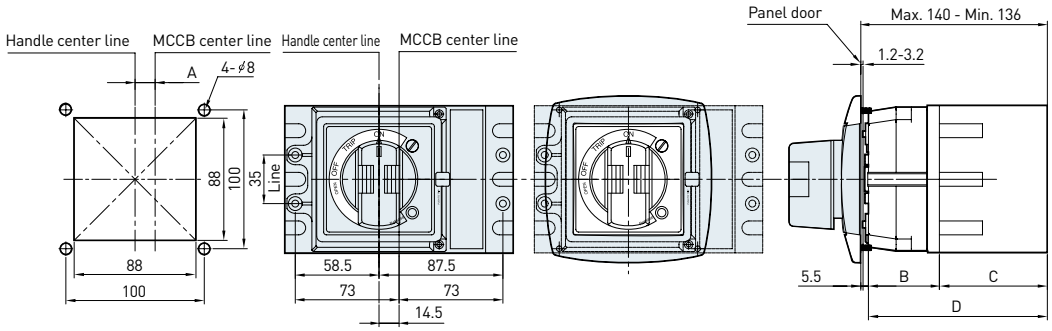

※ ON, OFF and TRIP are not marked on real products.

Applicable MCCB	Order code		Dimensions (mm)				Category	
	Upper power supply type	Left power supply type	A	B	C	D		
HBL103U, HBL103UM, HBL203U, HBL203UM	TFG 20U U4	TFG 20U L4	14.5	51.5	78	129.5	MCCB	MB
HBL103UQ, HBL103UMQ, HBL203UQ, HBL203UMQ	TFG 20UQ U4	TFG 20UQ L4	14.5	51.5	78	129.5		

Operating Accessories

| Motor operator (MOT) |



MOT-12NE MOT-68E

Applicable MCCB	Model	Control voltage (V)	Operational current (A)	Operation time (ms)		Power consumption (W)	Mechanical life (times)	Dimensions (mm)			
				Closing	Opening			A	B	C	D
UAB30C, UAB30R, UAB50C, UAB50R, UAB60C, UAB60R, UAB100C / UAD50C	MOT-10A	DC24V AC/DC110V	≤ 2.5 ≤ 0.5	310	200	14	25,000	90	132	93	30
UAB50S, UAB50H, UAB100R, UAB100S / UAD50S, UAD100R	MOT-10UA	AC/DC220V	≤ 0.5								
UCB50R, UCB100R, UCB100S / UCD100S	MOT-10UB	DC24V	≤ 2.5								
UCB50H, UCB50L, UCB100H, UCB100L / UCD50H, UCD100H	MOT-10F	AC/DC110V AC/DC220V	≤ 0.5 ≤ 0.5	310	200	14	10,000	90	132	93	30
UCB250R, UCB250S, UCB250N / UCD250S	MOT-20UC	DC24V	≤ 5.0								
UCB160H, UCB160L, UCB250H, UCB250L / UCD160H, UCD250H	MOT-20G	AC/DC110V AC/DC220V	≤ 3.0 ≤ 2.0	350	230	14	8,000	90	126	93	35
UCB400R, UCB400S, UCB400H, UCB400L / UCD400S	MOT-40D	DC24V AC/DC110V AC/DC220V	≤ 5.0 ≤ 3.0 ≤ 2.0	350	230	14	5,000	130	215	150	44
UCB630R, UCB630S, UCB630H, UCB630L, UCB800R, UCB800S, UCB800H, UCB800L / UCD630S, UCD800S	MOT-68E	DC24V AC/DC110V AC/DC220V	≤ 5.0 ≤ 3.0 ≤ 2.0	500	350	35	5,000	130	243	137	70
UCB1000S, UCB1000L, UCB1250S, UCB1250L / UCD1000S, UCD1250S	MOT-80NE	DC24V AC/DC110V AC/DC220V	≤ 5.0 ≤ 3.0 ≤ 2.0	820	500	120	3,000	130	340	150	70
UCB1600S	MOT-160NE	AC 220V	≤ 2.0	820	500	120	3,000	-	-	-	-
UPB100S, UPB100H, UPB100L, UPB100X, UPB160S, UPB160H, UPB160L, UPB160X, UPB250S, UPB250H, UPB250L, UPB250X / UPD100S, UPD160S, UPD250S	MOT-12UP	DC24V AC/DC110V AC/DC220V	≤ 5.0 ≤ 3.0 ≤ 2.0	700	420	35	10,000	130	130	150	45
UPB400S, UPB400H, UPB400L, UPB400X, UPB630S, UPB630H, UPB630L, UPB630X / UPD400S, UPD630S	MOT-46NE	DC24V AC/DC110V AC/DC220V	≤ 5.0 ≤ 3.0 ≤ 2.0	700	420	35	5,000	130	130	150	45
HBL103U, HBL103UM, HBL203U, HBL203UM, HBL103UQ, HBL103UMQ, HBL203UQ, HBL203UMQ	MOT-12UP	DC24V AC/DC110V AC/DC220V	≤ 5.0 ≤ 3.0 ≤ 2.0	700	420	35	10,000	130	130	150	45

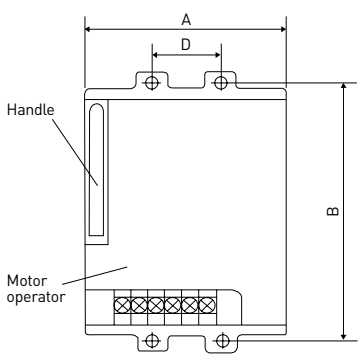

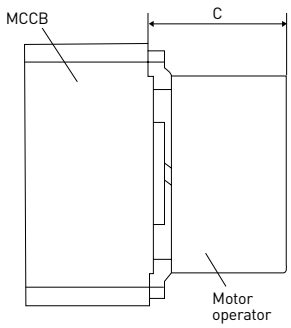

[MOT-10/20/40/68/80/12/46]

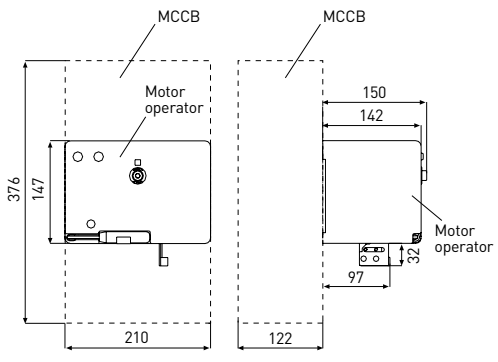

[MOT-160NE]

▪ Control circuit and wiring diagram

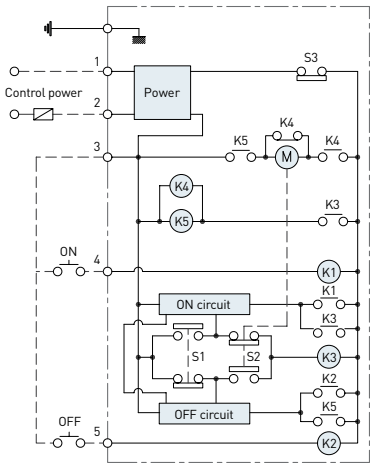

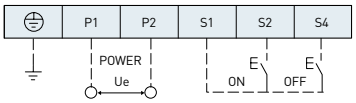

M : Motor
K1 : ON relay
K2 : OFF relay
K3, K4, K5 : Motor control relay

S1 : ON limit switch
S2 : OFF limit switch
S3 : Auto/Manual

▪ Standard order code

Applicable MCCB	Order code			Category	
	DC24V	AC/DC110V	AC/DC220V		
UAB30C, UAB30R, UAB50C, UAB50R, UAB60C, UAB60R, UAB100C / UAD50C	MOT 10A DC24	MOT 10A ADC110	MOT 10A ADC220	MCCB	MB
UAB50S, UAB50H, UAB100R, UAB100S / UAD50S, UAD100R	MOT 10UA DC24	MOT 10UA ADC110	MOT 10UA ADC220		
UCB50R, UCB100R, UCB100S / UCD100S	MOT 10UB DC24	MOT 10UB ADC110	MOT 10UB ADC220		
UCB50H, UCB50L, UCB100H, UCB100L / UCD50H, UCD100H	MOT 10F DC24	MOT 10F ADC110	MOT 10F ADC220		
UCB250R, UCB250S, UCB250N / UCD250S	MOT 20UC DC24	MOT 20UC ADC110	MOT 20UC ADC220		
UCB160H, UCB160L, UCB250H, UCB250L / UCD160H, UCD250H	MOT 20G DC24	MOT 20G ADC110	MOT 20G ADC220		
UCB400R, UCB400S, UCB400H, UCB400L / UCD400S	MOT 40D DC24	MOT 40D ADC110	MOT 40D ADC220		
UCB630R, UCB630S, UCB630H, UCB630L, UCB800R, UCB800S, UCB800H, UCB800L / UCD630S, UCD800S	MOT 68E DC24	MOT 68E ADC110	MOT 68E ADC220		
UCB1000S, UCB1000L, UCB1250S, UCB1250L / UCD1000S, UCD1250S	MOT 80NE DC24	MOT 80NE ADC110	MOT 80NE ADC220		
UCB1600S	-	-	MOT 160NE AC220[1]		
UPB100S, UPB100H, UPB100L, UPB100X, UPB160S, UPB160H, UPB160L, UPB160X, UPB250S, UPB250H, UPB250L, UPB250X / UPD100S, UPD160S, UPD250S	MOT 12UP DC24	MOT 12UP ADC110	MOT 12UP ADC220		
UPB400S, UPB400H, UPB400L, UPB400X, UPB630S, UPB630H, UPB630L, UPB630X / UPD400S, UPD630S	MOT 46NE DC24	MOT 46NE ADC110	MOT 46NE ADC220		
HBL103U, HBL103UM, HBL203U, HBL203UM, HBL103UQ, HBL103UMQ, HBL203UQ, HBL203UMQ	MOT 12UP DC24	MOT 12UP ADC110	MOT 12UP ADC220		

※ - Motor operator is not recommended for marine application.
1) MOT 160NE AC220 is not applicable for DC220V.

Operating Accessories

| Mechanical interlock (MIF) |

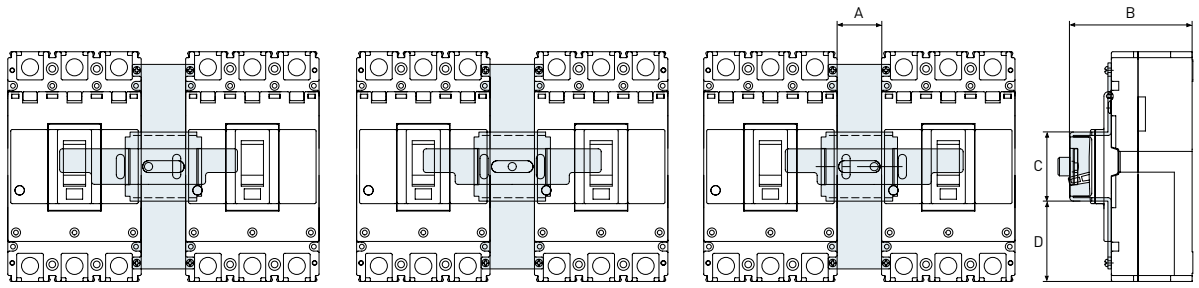

[Lock in OFF of left side breaker] [Lock of two breaker] [Lock in OFF of right side breaker]

A: Distance between MCCBs B: Distance between bottom of MCCB and top of MIF C: MIF width D: Distance between lower-side of MCCB and MIF

Applicable MCCB	Pole	Order code	Dimension (mm)			
			A	B	C	D
UAB30C, UAB30R, UAB50C, UAB50R, UAB60C, UAB60R, UAB100C / UAD50C	3P	MIF 10A 3	30	84	46.5	41.5
	4P	MIF 10A 4				
UAB50S, UAB50H, UAB100R, UAB100S / UAD50S, UAD100R	3P	MIF 10UA 3	30	84	46.5	41.5
	4P	MIF 10UA 4				
UCB50R, UCB50H, UCB50L UCB100R, UCB100S, UCB100H, UCB100L / UCD100S, UCD 50H, UCD100H	2, 3P	MIF 10UF 3	30	83	46.5	54.5
	4P	MIF 10UF 4				
UCB250R, UCB250S, UCB250N UCB160H, UCB160L, UCB250H, UCB250L / UCD160H, UCD250S, UCD250H	2, 3P	MIF 20UG 3	30	83	46.5	59.5
	4P	MIF 20UG 4				
UCB400R, UCB400S, UCB400H, UCB400L / UCD400S	2, 3P	MIF 40D 3	42.5	138	66.5	95
	4P	MIF 40D 4				
UCB630R, UCB630S, UCB630H, UCB630L UCB800R, UCB800S, UCB800H, UCB800L / UCD630S, UCD800S	2, 3P	MIF 80E 3	42.5	138	66.5	106.5
	4P	MIF 80E 4				
UPB100S, UPB100H, UPB100L, UPB100X UPB160S, UPB160H, UPB160L, UPB160X UPB250S, UPB250H, UPB250L, UPB250X HBL103U, HBL103UQ, HBL103UM, HBL103UMQ HBL203U, HBL203UQ, HBL203UM, HBL203UMQ / UPD100S, UPD160S, UPD250S	3P	MIF 12UP 3	30	109	46.5	70
	4P	MIF 12UP 4				
UPB400S, UPB400H, UPB400L, UPB400X UPB630S, UPB630H, UPB630L, UPB630X / UPD400S, UPD630S	3P	MIF 46UP 3	40	148	66.5	100.5
	4P	MIF 46UP 4				

| Padlock plate (PLD) |

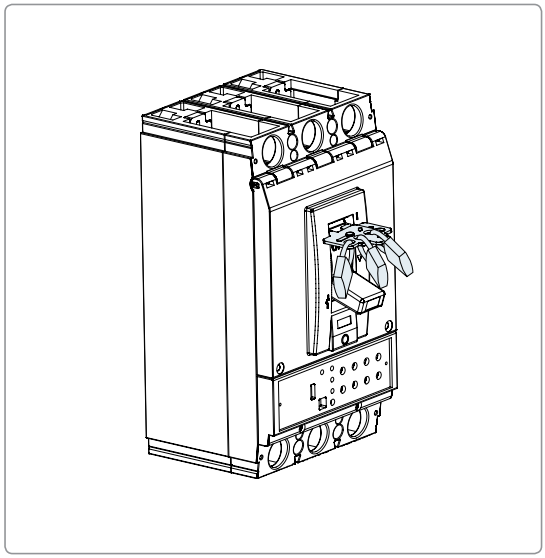

Applicable MCCB	Pole		
UAB30C, UAB30R, UAB50C, UAB50R, UAB50S, UAB50H, UAB60C, UAB60R, UAB100C, UAB100R, UAB100S / UAD50C, UAD50S, UAD100R	PLD 10UA	MCCB	MB
UCB50R, UCB50H, UCB50L, UCB100R, UCB100S, UCB100H, UCB100L / UCD50H, UCD100S, UCD100H UCB160H, UCB160L, UCB250R, UCB250S, UCB250N, UCB250H, UCB250L / UCD160H, UCD250S, UCD250H	PLD 10UF		
UCB400R, UCB400S, UCB400H, UCB400L, UCB630R, UCB630S, UCB630H, UCB630L, UCB800R, UCB800S, UCB800H, UCB800L / UCD400S , UCD630S , UCD800S	PLD 40D		
UCB1000S, UCB1000L, UCB1250S, UCB1250L / UCD1000S, UCD1250S	PLD 120NE		
UPB100S, UPB100H, UPB100L, UPB100X, UPB160S, UPB160H, UPB160L, UPB160X, UPB250S, UPB250H, UPB250L, UPB250X, UPB400S, UPB400H, UPB400L, UPB400X, UPB630S, UPB630H, UPB630L, UPB630X / UPD100S, UPD160S, UPD250S, UPD400S, UPD630S	PLD 12UP		
HBL103U, HBL103UM, HBL203U, HBL203UM, HBL103UQ, HBL103UMQ, HBL203UQ, HBL203UMQ			

| Extension handle (THA) |

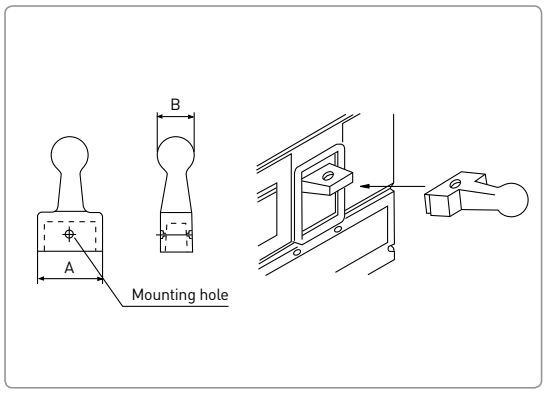

※ Excessive force in ON and OFF may break the handle of breaker.

Applicable MCCB	Order code	Dimensions (mm)		Category	
		A	B		
UCB400R, UCB400S, UCB400H, UCB400L, UCB630R, UCB630S, UCB630H, UCB630L, UCB800R, UCB800S, UCB800H, UCB800L / UCD400S, UCD630S, UCD800S	THA 46D	42	40	MCCB	MB
UCB1000S, UCB1000L, UCB1250S, UCB1250L / UCD1000S, UCD1250S	THA 120NE	56	40		
UPB400S, UPB400H, UPB400L, UPB400X, UPB630S, UPB630H, UPB630L, UPB630X / UPD400S, UPD630S	THA 46UP	42	30		

Mounting Accessories

- Mounting accessories enable easy installation, maintenances and remove of breakers.

DIN-rail adaptor **DRA**

- Mounted on back side of UAB type breaker and enables direct installation on 35mm DIN-rail

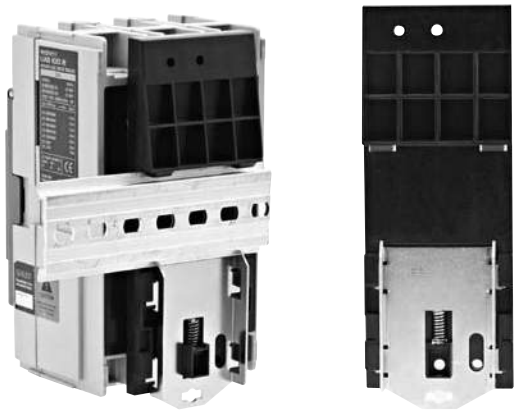

Mounting base **TDM**

- Installed on back plate of panel and breaker can be easily replaced or maintained without cable disconnection

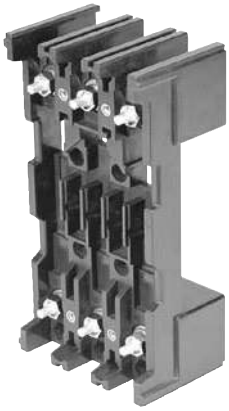

| DIN-rail adaptor (DRA) |

Applicable MCCB	Order code	Category	
UAB50S, UAB50H, UAB100R, UAB100S / UAD50S, UAD100R	DRA 10UA	MCCB	MB

| Mounting base (TDM) and components for plug-in mounting |

• Switchboard application

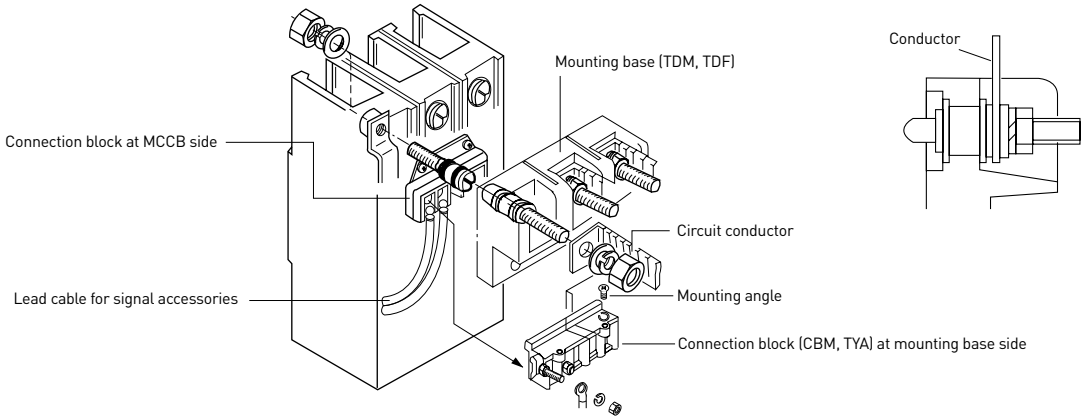

※ The shape of mounting bases of each MCCB are not same as above. For exact appearances, please refer to "Characteristic Curves & Dimensions" from page 136-185.

Applicable MCCB	For both line & load side plug-in mounting							For line side only plug-in mounting		Category	
	Mounting base		Connection block[1]			Conn. block barrier		Mounting base			
	Order code	Required quantity	Order code	Contact	Required quantity	Order code	Required quantity	Order code	Required quantity		
UAB30C, UAB30R, UAB50C, UAB50R, UAB60C, UAB60R, UAB100C / UAD50C	TDM 10AP	1EA	CBM 10AB 2	2C	1EA	CBM BARR	1EA	TDM 10AF	1EA	MCCB	MB
UAB50S, UAB50H, UAB100R, UAB100S / UAD50S, UAD100R			CBM 10AB 3	3C	1EA						
UCB50R, UCB50H, UCB50L, UCB100R, UCB100S, UCB100H, UCB100L / UCD100S, UCD50H, UCD100H	TDM 10BP	1EA	CBM 10AB 2	2C	1EA	CBM BARR	1EA	TDM 10BF	1EA		
			CBM 10AB 3	3C	1EA						
UCB160H, UCB160L, UCB250R, UCB250S, UCB250N, UCB250H, UCB250L / UCD160H, UCD250S, UCD250H	TDM 20CF	2EA	CBM 20C 2	2C	1EA	-	-	TDM 20CF	1EA		
			CBM 20C 5	5C	1EA						
UCB400R, UCB400S, UCB400H, UCB400L / UCD400S	TDM 4BA	2EA	TYA 5/2[2]	2C	1EA	-	-	TDM 4BA	1EA		
			TYA 5/5[2]	5C	1EA						
UCB630R, UCB630S, UCB630H, UCB630L, UCB800R, UCB800S, UCB800H, UCB800L / UCD630S, UCD800S	TDM 5BA	2EA	TYA 5/2[2]	2C	1EA	-	-	TDM 5BA	1EA		
			TYA 5/5[2]	5C	1EA						
UPB100S, UPB100H, UPB100L, UPB100X, UPB160S, UPB160H, UPB160L, UPB160X, UPB250S, UPB250H, UPB250L, UPB250X / UPD100S, UPD160S, UPD250S	TDM 12NEP	1EA	CBM 26NE 6	6C	1EA	-	-	TDM 12NEF	1EA		
			CBM 26NE 6	12C	2EA						
UPB400S, UPB400H, UPB400L, UPB400X, UPB630S, UPB630H, UPB630L, UPB630X / UPD400S, UPD630S	TDM 46NEP	1EA	CBM 26NE 6	6C	1EA	-	-	TDM 46NEF	1EA		
			CBM 26NE 6	12C	2EA						
HBL103U, HBL103UM, HBL203U, HBL203UM, HBL103UQ, HBL103UMQ, HBL203UQ, HBL203UMQ	TDM 12NEP	1EA	CBM 26NE 6	6C	1EA	-	-	TDM 12NEF	1EA		
			CBM 26NE 6	12C	2EA						

※ - Plug-in mounting is applicable for 3P breaker.
- Internal accessories do not support plug-in connection when installed seperately. Please contact us before order.
1] Connection blocks (CBM, TYA) are required for internal signal accessory installation in both line & load side plug-in type 3P breaker.
2] TYA type connection blocks are to be installed with separate mounting angle. Separate mounting angle is not supplied.

Mounting Accessories

• TDF 10A

(Unit : mm)

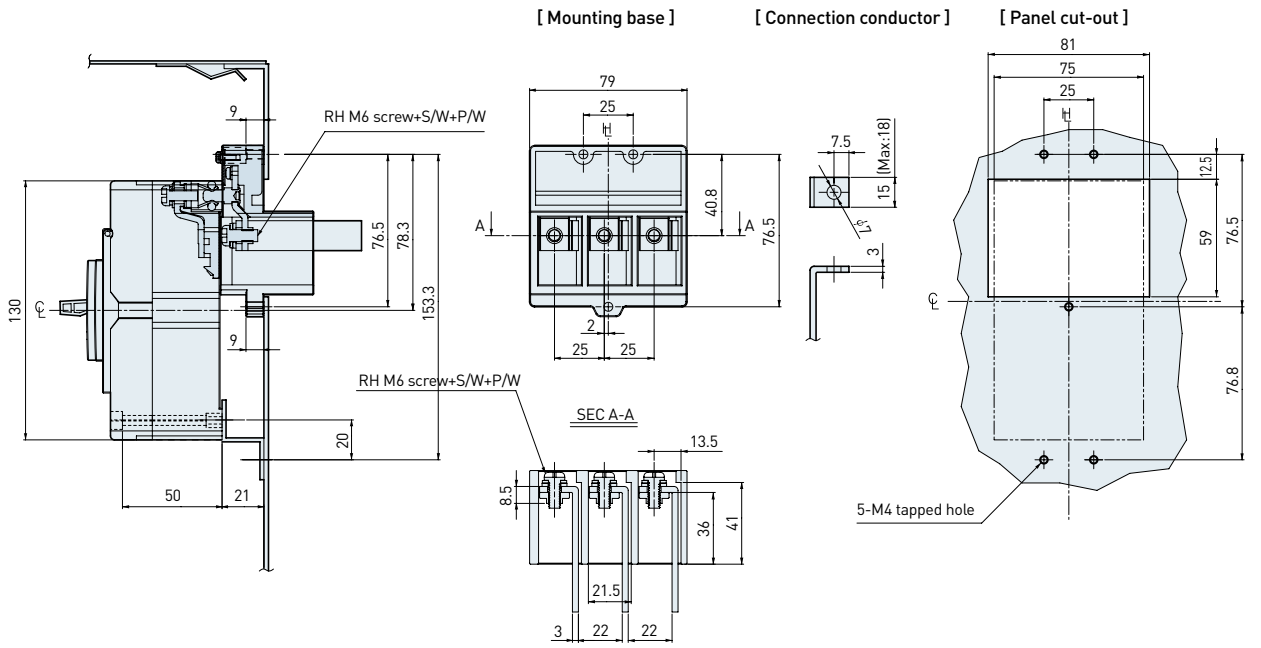

• TDF 10B

(Unit : mm)

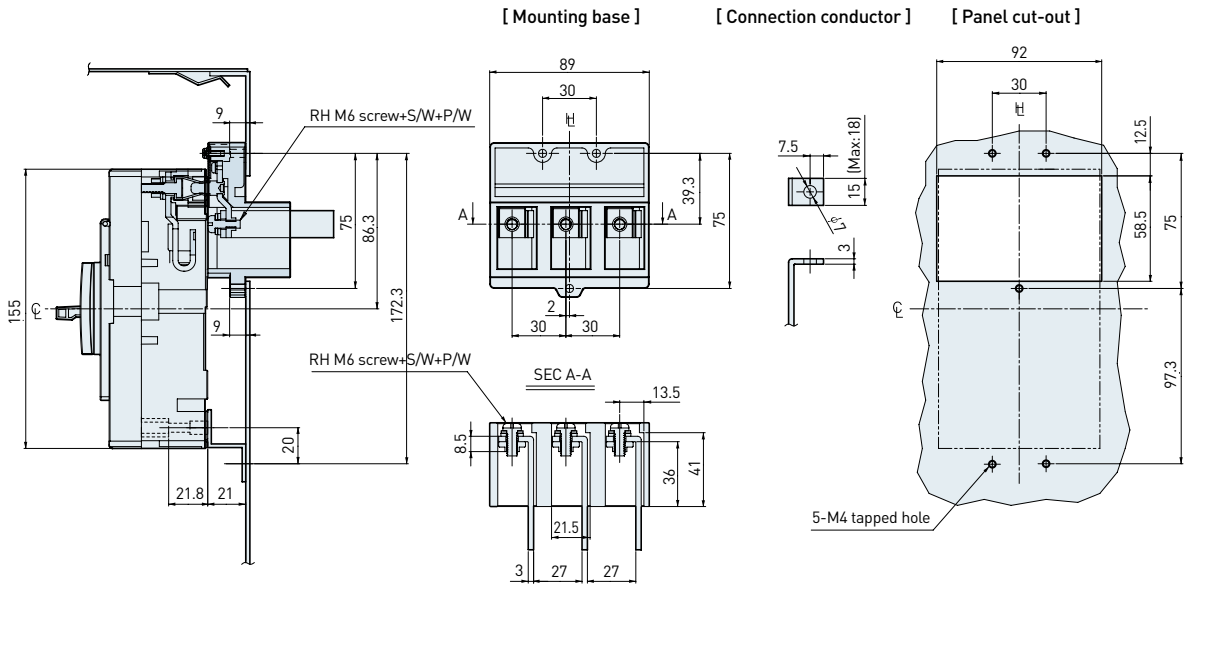

• Distribution board application

Application	Applicable MCCB	Item		Order code	Required quantity	Mounting screw
Double mounting	UAB50R, UAB50S, UAB50H, UAB60R, UAB100C, UAB100R, UAB100S	Mounting base unit		TDA 10AD ASSY	1EA	
		For component order	Mounting base	TDA 10AS	2EA	M5 x L18 4EA for mounting angle
			Branching conductor	2RT-PH A	2EA	M5 x L12 1EA for bus bar
				22S-PH10 A	1EA	M4 x L8 2EA for brancing conductor
			Arc protection barrier	BRAN-BARR A	2EA	
		Connection plate		CONN-PL A	1EA	M4 x L25 4EA
				ARC-PL A	1EA	
	UCB50H, UCB50L, UCB100R, UCB100S, UCB100H, UCB100L	Mounting base unit		TDA 10BD ASSY	1EA	
		For component order	Mounting base	TDA 10BS	2EA	M5 x L20 4EA for mounting angle
			Branching conductor	2RT-PH	2EA	M5 x L12 1EA for bus bar
				22S-PH10	1EA	M4 x L8 2EA for brancing conductor
			Arc protection barrier	BRAN-BARR	2EA	
		Connection plate		CONN-PL	1EA	M4 x L25 4EA
				ARC-PL	1EA	
Single mounting	UAB50R, UAB50S, UAB50H, UAB60R, UAB100C, UAB100R, UAB100S	Mounting base		TDA 10AS	1EA	M4 x L30 4EA for mounting angle
		Branching conductor	5-63A	1R-PH A	1EA	M5 x L12 1EA for bus bar M4 x L8 1EA for brancing conductor
				1S-PH	1EA	
				1T-PH	1EA	
			75-125A	1R-PH10 A	1EA	
				1S-PH10	1EA	
				1T-PH10	1EA	
	UCB50H, UCB50L, UCB100R, UCB100S, UCB100H, UCB100L	Mounting base		TDA 10BS	1EA	M5 x L32 4EA for mounting angle
		Branching conductor	5-63A	1R-PH	1EA	M5 x L12 1EA for bus bar M4 x L8 1EA for brancing conductor
				1S-PH	1EA	
				1T-PH	1EA	
			75-125A	1R-PH10	1EA	
				1S-PH10	1EA	
				1T-PH10	1EA	

※ Mounting base shall be connected to load side of MCCB.

Branching conductor

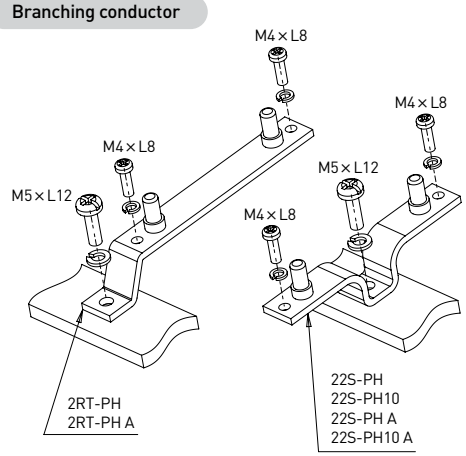

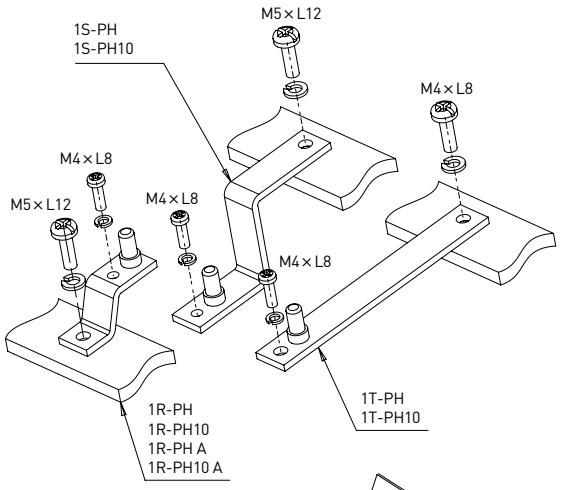

Connection plate

CONN-PL
CONN-PL A

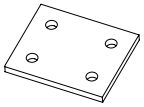

Arc protection barrier

ARC-PL
ARC-PL A

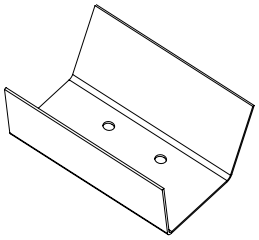

Mounting Accessories

• TDA 10AD / Double mounting

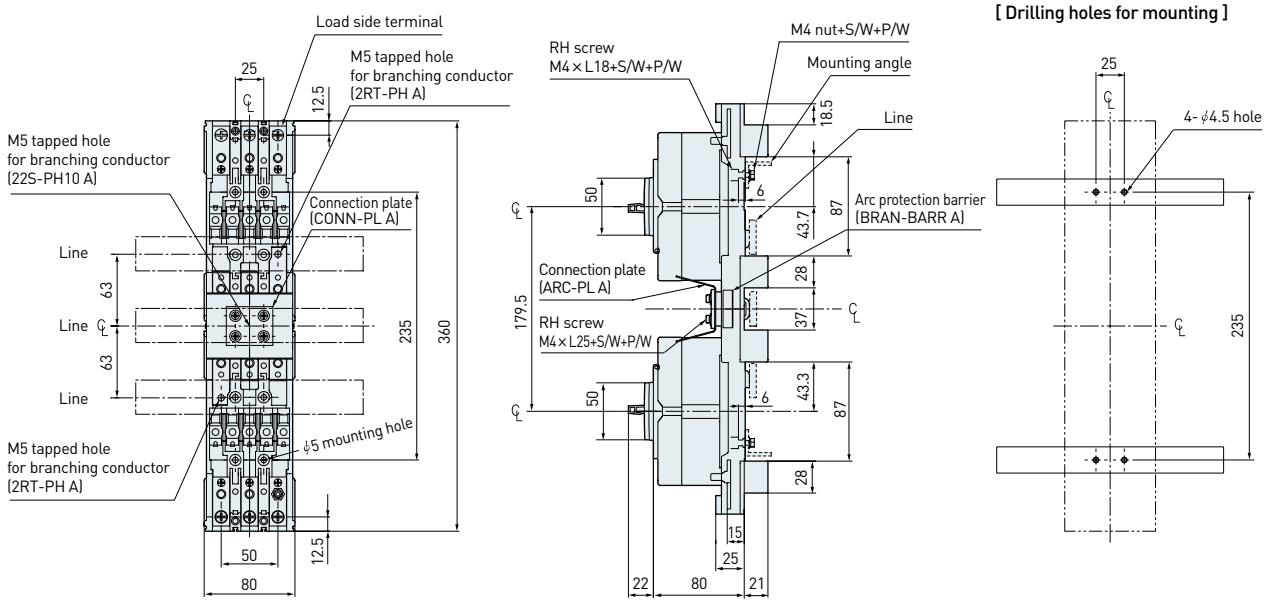

• TDA 10AS / Single mounting

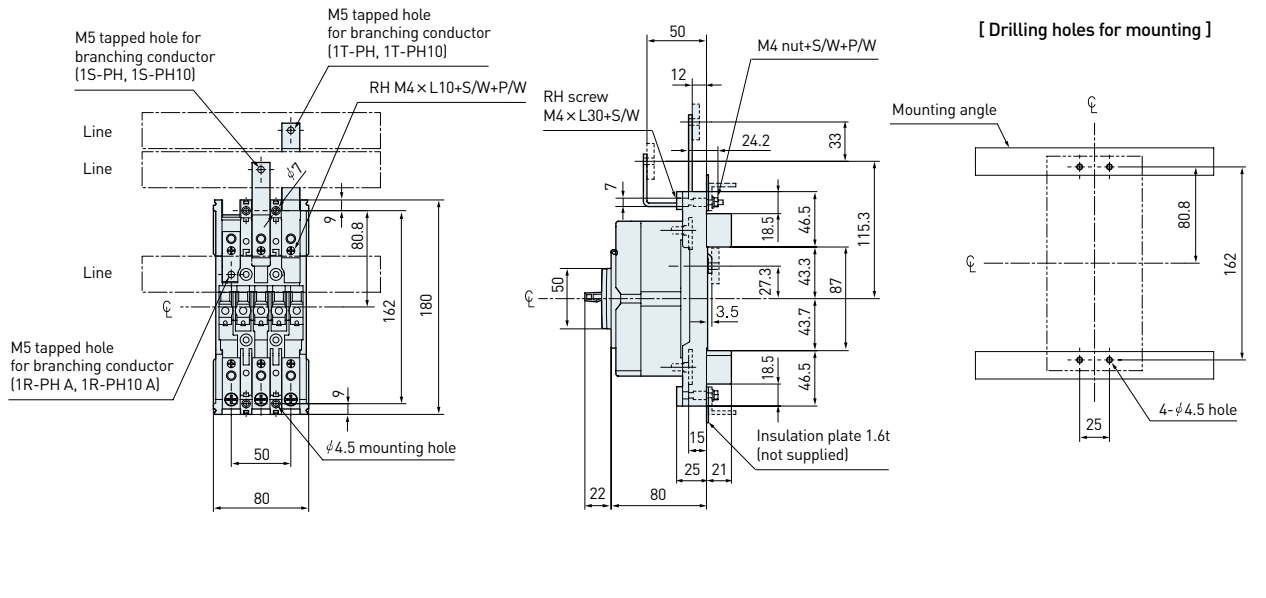

• TDA 10BD / Double mounting

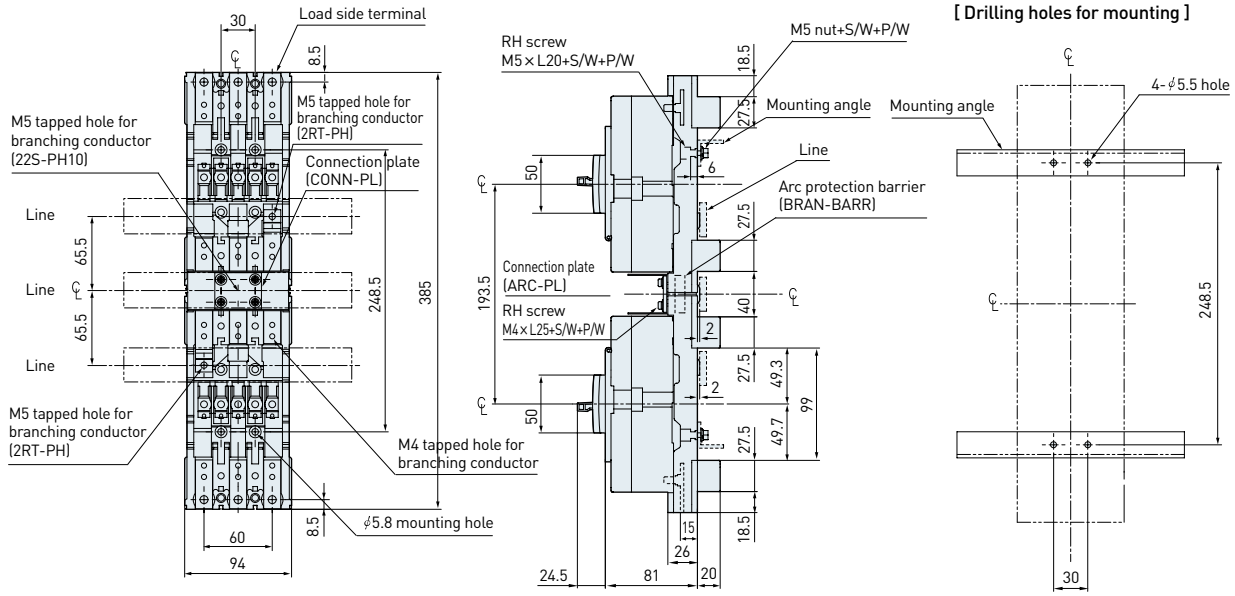

• TDA 10BS / Single mounting

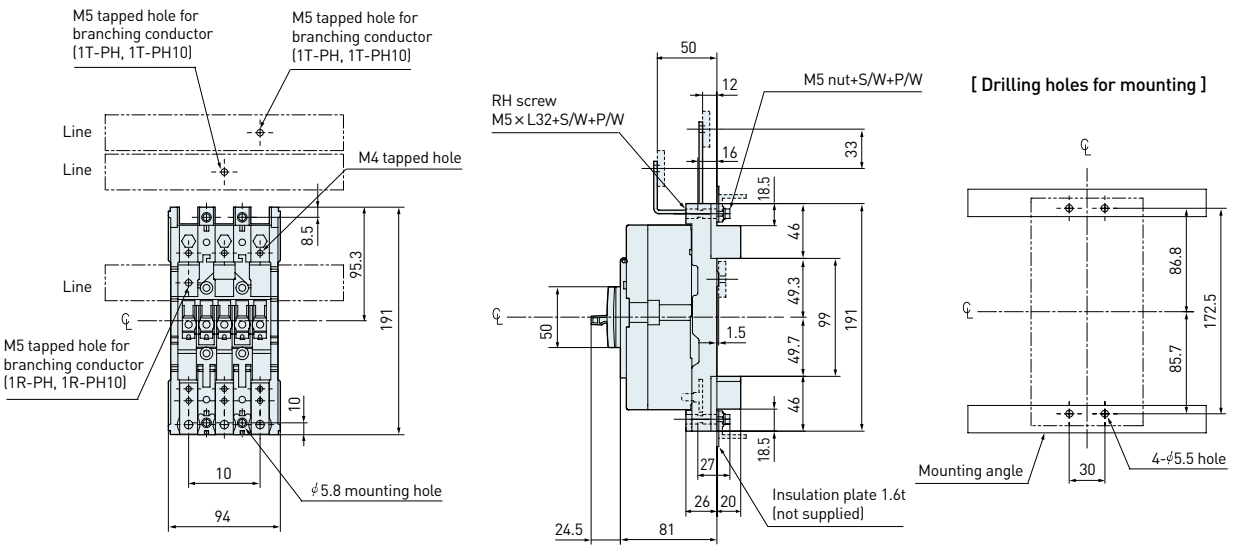

Terminal Accessories

- Terminal accessories offers convenience of connection, high protection for safety.

Terminal bus bar TBB

- Increases the distances between terminals



Terminal cover TCF

- Prevents direct contact to live terminal as well as insertion of external material



Cage terminal block CTB

- Offers easy and direct connection of cables



Interpole barrier TQQ

- Increases the insulation between poles



Rear barrier REAR-BR

- Enhance the insulation of terminal

| Terminal connection screws / standard components |

Type	Size	Applicable MCCB
Clamp screw 	M5	- UAB30C, UAB30R, UAB50C, UAB50R, UAB50S, UAB50H, UAB60C, UAB60R, UAB100C (5-50A), UAB100R (15-50A), UAB100S (15-50A) / UAD50C, UAD50S - UCB50R - UBD30L, UBD30H, UMB30R, UMB30S, UMB30H, UMB50S, UMB50H, UDB30S, UDB30H, UDB50S, UDB50H, UDB100S (15-50A), UDB100H (15-50A), UGD30L, UGD30H, UMG30R, UMG30S, UMG30H, UMG50S, UMG50H, UDG30S, UDG30H, UDG50S, UDG50H, UDG100S (15-50A), UDG100H (15-50A)
Pan head screw 	M8	- UAB100C (60-100A), UAB100R (60-100A), UAB100S (60-100A) / UAD100R - UCB50H, UCB50L, UCB100R, UCB100S, UCB100H, UCB100L, UCB160H, UCB160L, UCB250R, UCB250S, UCB250N, UCB250H, UCB250L / UCD50H, UCD100S, UCD100H, UCD160H, UCD250S, UCD250H - UDB100S (60-100A), UDB100H (60-100A), UDG100S (60-100A), UDG100H (60-100A) - UPB100S, UPB100H, UPB100L, UPB100X, UPB160S, UPB160H, UPB160L, UPB160X, UPB250S, UPB250H, UPB250L, UPB250X / UPD100S, UPD160S, UPD250S - HBL103U, HBL103UM, HBL203U, HBL203UM, HBL103UQ, HBL103UMQ, HBL203UQ, HBL203UMQ
Hexagon socket head screw 	M10	- UCB400R, UCB400S, UCB400H, UCB400L / UCD400S - UPB400S, UPB400H, UPB400L, UPB400X, UPB630S, UPB630H, UPB630L, UPB630X / UPD400S, UPD630S
	M12	- UCB630R, UCB630S, UCB630H, UCB630L, UCB800R, UCB800S, UCB800H, UCB800L / UCD630S, UCD800S
Hexagon head screw 	M12	- UCB1000S, UCB1000L, UCB1250S, UCB1250L / UCD1000S, UCD1250S
	M13	- UCB1600S

| Terminal bus bar (TBB) |

Applicable MCCB	Order code			Mounting hole	Category	
	2 pole (4EA/SET)	3 pole (6EA/SET)	4 pole (8EA/SET)			
UCB250R, UCB250S, UCB250N / UCD250S	TBB 20C 2	TBB 20C 3	TBB 20C 4	∮ 11	MCCB	MB
UCB160H, UCB160L, UCB250H, UCB250L / UCD160H, UCD250H						
UCB400R, UCB400S, UCB400H, UCB400L / UCD400S	TBB 4S 2	TBB 4S 3	TBB 4S 4	∮ 13		
UCB630R, UCB630S, UCB630H,UCB630L / UCD630S	TBB 6S 2	TBB 6S 3	TBB 6S 4	∮ 13		
UCB800R, UCB800S, UCB800H, UCB800L / UCD800S	TBB 8S 2	TBB 8S 3	TBB 8S 4	∮ 13		
UPB100S, UPB100H, UPB100L, UPB100X, UPB160S, UPB160H, UPB160L, UPB160X, UPB250S, UPB250H, UPB250L, UPB250X / UPD100S, UPD160S, UPD250S	-	TBB 12NE 3	TBB 12NE 4	∮ 11		
UPB400S, UPB400H, UPB400L, UPB400X / UPD400S	-	TBB 40NE 3	TBB 40NE 4	∮ 13		
UPB630S, UPB630H, UPB630L, UPB630X / UPD630S	-	TBB 60NE 3	TBB 60NE 4	∮ 13		
HBL103U, HBL103UM, HBL203U, HBL203UM, HBL103UQ, HBL103UMQ, HBL203UQ, HBL203UMQ	-	TBB 12NE 3	-	∮ 11		

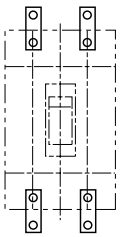

[2 pole]

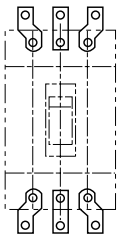

[3 pole]

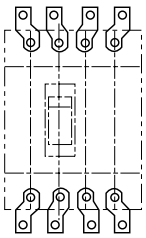

[4 pole]

Terminal Accessories

| Cage terminal block (CTB) |

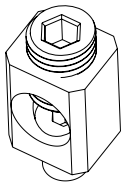

CTB 10A
CTB 10B
CTB 20C

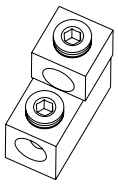

CTB 40D
CTB 46UP

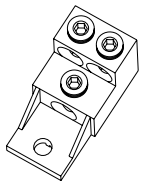

CTB 80E

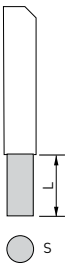

Wire

Applicable MCCB	Order code		Connection				Category	
	3EA/SET	4EA/SET	Cable connector (EA)	Wire size S (㎟)	Wire size L (㎜)	Tightening torque (kgf-㎝)		
UAB30C, UAB30R, UAB50C, UAB50R, UAB50S, UAB50H, UAB60C(5-50A), UAB60R(5-50A), UAB100C(5-50A), UAB100R(15-50A), UAB100S(15-50A) / UAD50L, UAD50S	CTB 10A 3S50	CTB 10A 4S50	1	1 X 5.5-50	14	60	MCCB	MB
UAB60C(60A), UAB60R(60A), UAB100C(60-100A), UAB100R(60-100A), UAB100S(60-100A) / UAD100R	CTB 10A 3S100	CTB 10A 4S100	1	1 X 5.5-50	14	60		
UCB50R, UCB100R, UCB100S / UCD100S UCB50H, UCB50L, UCB100H, UCB100L / UCD50H, UCD100H	CTB 10B 3S	CTB 10B 4S	1	1 X 8-50	14	60		
UCB250R, UCB250S, UCB250N / UCD250S UCB160H, UCB160L, UCB250H, UCB250L / UCD160H, UCD250H	CTB 20C 3S	CTB 20C 4S	1	1 X 14-120	19	140		
UCB400R, UCB400S, UCB400H, UCB400L / UCD400S	CTB 40D 3S	CTB 40D 4S	2	2 X 60-120	30-60	353		
UCB630R, UCB630S, UCB630H, UCB630L, UCB800R, UCB800S, UCB800H, UCB800L / UCD630S, UCD800S	CTB 80E 3S	CTB 80E 4S	3	3 X 85-160	30-60	353		
UPB100S, UPB100H, UPB100L, UPB100X / UPD100S UPB160S, UPB160H, UPB160L, UPB160X, UPB250S, UPB250H, UPB250L, UPB250X / UPD160S, UPD250S	CTB 12UP 3S	CTB 12UP 4S	1	1 X 14-120	19	140		
UPB400S, UPB400H, UPB400L, UPB400X / UPD400S UPB630S, UPB630H, UPB630L, UPB630X / UPD630S	CTB 46UP 3S	CTB 46UP 4S	2	2 X 60-185	30-60	353		
HBL103U, HBL103UM, HBL203U, HBL203UM HBL203U, HBL203UM, HBL203UQ, HBL203UMQ	CTB 12UP 3S	CTB 12UP 4S	1	1 X 14-120	19	140		

| Terminal cover (TCF) |

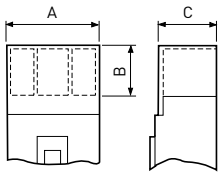

Applicable MCCB	2 pole				3 pole				4 pole				Category	
	Order code	Dimensions			Order code	Dimensions			Order code	Dimensions				
		A	B	C		A	B	C		A	B	C		
UAB30C, UAB30R, UAB50C, UAB50R, UAB60C, UAB60R, UAB100C / UAD50C	TCF 10AP 2	50	5.5	60	TCF 10AP 3	75	5.5	60	TCF 10AP 4	100	5.5	60	MCCB	MB
UAB50S, UAB50H, UAB100R, UAB100S / UAD50S, UAD100R														
UCB50R, UCB100R, UCB100S / UCD100S	TCF 10BP 2	60	10	59	TCF 10BP 3	90	10	59	TCF 10BP 4	120	10	59		
UCB250R, UCB250S, UCB250N / UCD250S	TCF 20CP 3	105	10.5	59	TCF 20CP 3	105	10.5	59	TCF 20CP 4	140	10.5	59		
UCB50H, UCB50L, UCB100H, UCB100L / UCD50H, UCD100H	TCF 10FP 3	90	10	59	TCF 10FP 3	90	10	59	TCF 10FP 4	120	10	59		
UCB160H, UCB160L, UCB250H, UCB250L / UCD160H, UCD250H	TCF 20GP 3	105	10	59	TCF 20GP 3	105	10	59	TCF 20GP 4	140	10	59		
UCB400R, UCB400S, UCB400H, UCB400L / UCD400S	TCF 40D 3	190	120	100	TCF 40D 3	190	120	100	TCF 40D 4	234	120	100		
UCB630R, UCB630S, UCB630H, UCB630L, UCB800R, UCB800S, UCB800H, UCB800L / UCD630S, UCD800S	TCF 80E 3	230	139	100	TCF 80E 3	230	139	100	TCF 80E 4	300	139	100		
UCB1600S	-	-	-	-	TCF 160NE 3	210	51	151	-	-	-	-		
UPB100S, UPB100H, UPB100L, UPB100X, UPB160S, UPB160H, UPB160L, UPB160X, UPB250S, UPB250H, UPB250L, UPB250X / UPD100S, UPD160S, UPD250S	-	-	-	-	TCF 12UP 3	105	10	82.5	TCF 12UP 4	140	10	82.5		
UPB400S, UPB400H, UPB400L, UPB400X, UPB630S, UPB630H, UPB630L, UPB630X / UPD400S, UPD630S	-	-	-	-	TCF 46UP 3	140	10	108	TCF 46UP 4	185	10	108		
HBL103U, HBL103UM, HBL203U, HBL203UM, HBL103UQ, HBL103UMQ, HBL203UQ, HBL203UMQ	-	-	-	-	TCF 12UP 3	105	10	82.5	-	-	-	-		

※ For both line and load side of MCCB, 2EA shall be ordered.

| Rear barrier (REAR-BR) |

Applicable MCCB	Order code			Category	
	2 pole	3 pole	4 pole		
UAB30C, UAB30R, UAB50L, UAB50R, UAB50S,UAB50H, UAB60C, UAB60R, UAB100C, UAB100R, UAB100S / UAD50C, UAD50S, UAD100R	REAR-BR 10A 2	REAR-BR 10A 3	-	MCCB	MB
UCB50R, UCB100R, UCB100S / UCD100S	REAR-BR 10B 2	REAR-BR 10B 3	-		
UCB250R, UCB250S, UCB250N / UCD250S	REAR-BR 20C 3	REAR-BR 20C 3	REAR-BR 20C 4		

※ For both line and load side of MCCB, 2EA shall be ordered.

Terminal Accessories

| Interpole barrier (TQQ) |

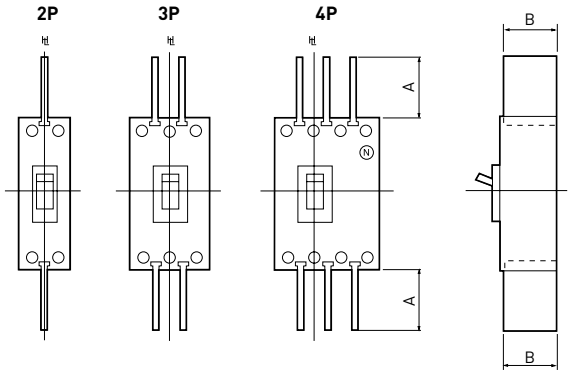

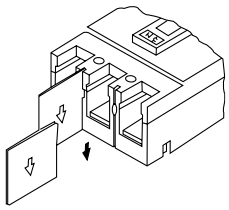

Applicable MCCB	Order code	Description (Quantity supplied as standard components of 3 pole MCCB)	Required quantity for both line and load side of MCCB			Dimensions		Category	
			2 pole	3 pole	4 pole	A	B		
UAB30C, UAB30R, UAB50C, UAB50R, UAB60C, UAB60R, UAB100C / UAD50C UAB50S, UAB50H, UAB100R, UAB100S / UAD50S, UAD100R	TQQ 10A 3PLINE	2EA/SET	2	4	6	50	53	MCCB	MB
UCB50R, UCB100R, UCB100S / UCD100S	TQQ 10B 3PLINE	2EA/SET	2	4	6	50	53		
UCB250R, UCB250S, UCB250N / UCD250S	TQQ 20C 3PLINE	2EA/SET	4	4	6	50	53		
UCB50H, UCB50L, UCB100H, UCB100L, UCB160H, UCB160L, UCB250H, UCB250L / UCD50H, UCD100H, UCD160H, UCD250H	TQQ 12FG 3PLINE	2EA/SET	4	4	6	51	53		
UCB400R, UCB400S, UCB400H, UCB400L / UCD400S	TQQ 4BA 3PLINE	2EA/SET	4	4	6	120	97		
UCB630R, UCB630S, UCB630H, UCB630L, UCB800R, UCB800S, UCB800H, UCB800L / UCD630S, UCD800S	TQQ 5BA 3PLINE	2EA/SET	4	4	6	110	95		
UCB1000S, UCB1000L, UCB1250S, UCB1250L / UCD1000S, UCD1250S	TQQ 80NE 3P	2EA/SET	-	4	6	125	92		
UCB1600S	TQQ 160NE 3P[1]	4EA/SET	-	4	-	102	68		
UPB100S, UPB100H, UPB100L, UPB100X, UPB160S, UPB160H, UPB160L, UPB160X, UPB250S, UPB250H, UPB250L, UPB250X / UPD100S, UPD160S, UPD250S	TQQ 12NE 3P	4EA/SET	-	4	6	71	54.5		
UPB400S, UPB400H, UPB400L, UPB400X, UPB630S, UPB630H, UPB630L, UPB630X / UPD400S, UPD630S	TQQ 46NE 3P	4EA/SET	-	4	6	122	103		
HBL103U, HBL103UM, HBL203U, HBL203UM, HBL103UQ, HBL103UMQ, HBL203UQ, HBL203UMQ	TQQ 12NE 3P	4EA/SET	-	4	-	71	54.5		
UDB30S, UDB30H, UDB50S, UDB50H, UDB100S, UDB100H, UDG30S, UDG30H, UDG50S, UDG50H, UDG100S, UDG100H	TQQ 10A 3PLINE	2EA/SET	2	4	-	50	53		

※ 1] This item is not sold separately

Portable Test Equipment

| MCCB trip unit tester |

• MCCB trip unit tester (MCCB OCR TESTER) can test LTD and STD (below 600%) function of trip unit in the field



Order code		MCCB OCR TESTER
Rated voltage	input	AC100-230V
	output	DC 9V
Dimension		W320 x H115 x D265 mm
Weight		2.7 kg
Standard kit		Tester, DC9V adaptor, connector
Applicable MCCB		- UCB1000S, UCB1000L, UCB1250S, UCB1250L - UPB100S, UPB100H, UPB100L, UPB100X, UPB160S, UPB160H, UPB160L, UPB160X, UPB250S, UPB250H, UPB250L, UPB250X, UPB400S, UPB400H, UPB400L, UPB400X, UPB630S, UPB630H, UPB630L, UPB630X



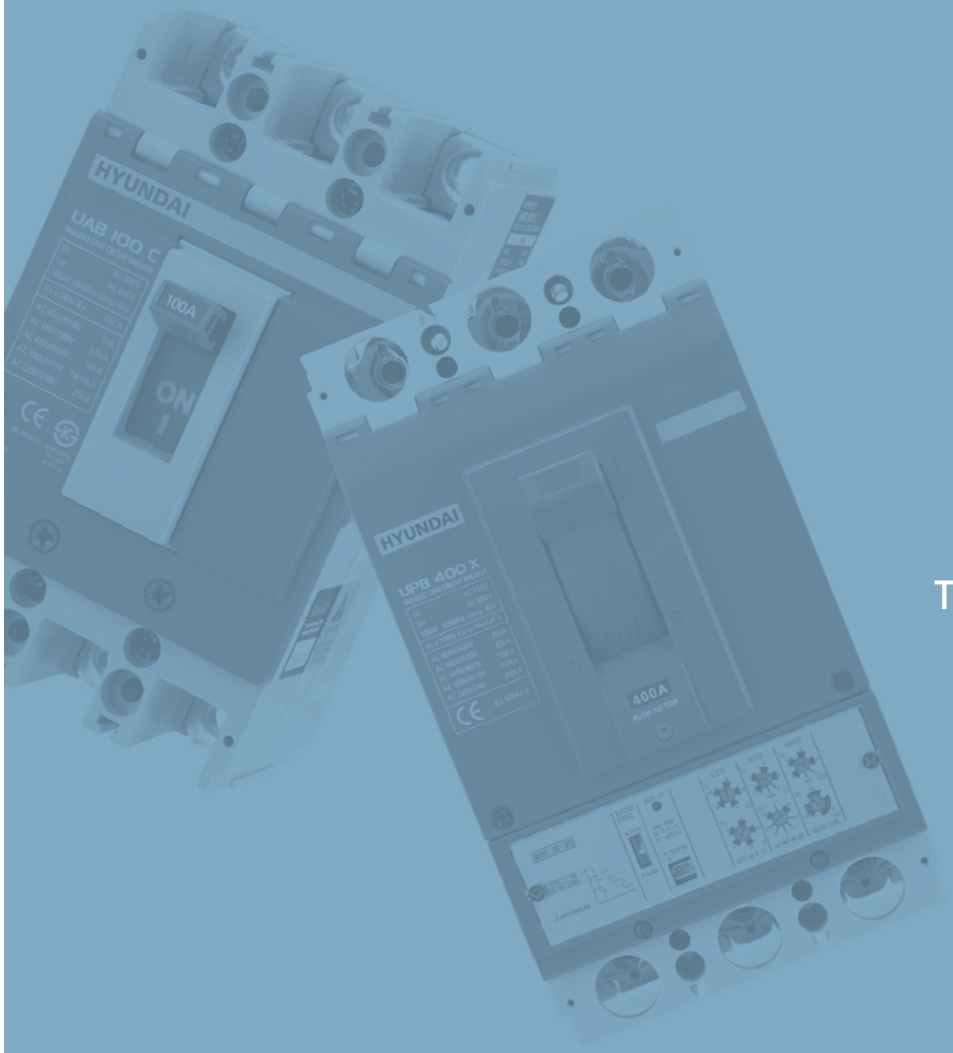

Technical Information

Current Setting for UPB type and UCB 1000-1600 type

| UPB100, UPB160, UPB250 / Thermal magnetic type |

• Protection characteristics and current setting

Rated current [In] (A)				15	16	20	25	30	32	40	50	60	63	75	80	100	125	150	160	175	200	225	250
LTD	① Rated current setting [Ir] (A)	In x	0.8	12		16		24		32	40	48	50	60	64	80	100	120		140	160	180	200
			0.9	14		18		27		36	45	54	57	68	72	90	113	135		158	180	203	225
			1.0	15	16	20	25	30	32	40	50	60	63	75	80	100	125	150	160	175	200	225	250
INST	② Instantaneous current setting [Ii] (A)	Fixed (In x 10)		150	160	200	250	300	320	400	500	600	630	750	800	1000	1250	1500	1600	1750	2000	2250	2500
			Tolerance	20%±																			
			Trip unit	UPB100: MTM-10-JF, UPB160: MTM-16-JF, UPB250: MTM-25-JF																			
		Adjustable[1]		-												In x 5-6-7-8-9-10							
			Tolerance	-												In x 5-9: +30%, −20% In x 10: ±20%							
			Trip unit	-												UPB160: MTM-16-JJ, UPB250: MTM-25-JJ							

※ 1) Adjustable instantataneous is available for UPB160 and UPB250.

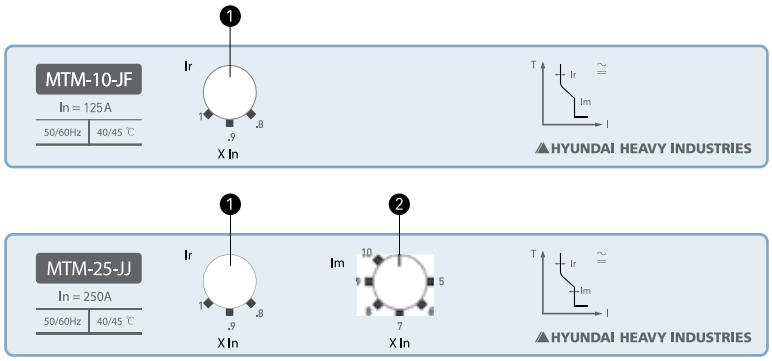

1. LTD current [Ir] setting knob
2. INST current [Ii] setting knob

| UPB100, UPB160, UPB250 / Electronic type |

• Protection characteristics and current setting

Model		UPB100	UPB160	UPB250	
Trip unit		MOR-10-ES	MOR-16-ES	MOR-25-ES	
Rated (CT) current [In] (A)		125	160	250	
LTD	① Rated current setting [Ir] (A)	50, 55, 63, 70, 80, 90, 100, 115, 125	63, 70, 80, 90, 100, 110, 125, 140, 160	100, 110, 125, 140, 160, 175, 200, 225, 250	
	Long time setting [tr]	6.25 sec. at Ir x 600%		Tolerance	±20%
STD	② Short time pick-up current [Isd] (A)	Ir x NON-2-3-4-5-6-7-8-9-**10**		Tolerance	
	④ Time delay setting [tsd]	0.05-0.1-0.2-**0.3** sec. at definite time-limit section		Tolerance	+50ms, −20ms
INST	Instantaneous current setting [Ii] (A)	In x **1100**%		Tolerance	±20%
PTA	Pre-trip alarm current [Ip] (A)	Ir x **90**%		Tolerance	

※ The default values are underlined. Please check and adjust the setting condition of each characteristic before use.

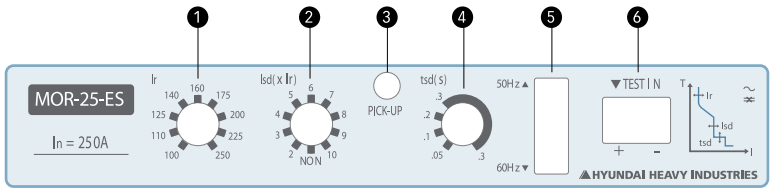

1. LTD current [Ir] setting knob
2. STD current [Isd] setting knob
3. Pick-up LED
4. STD time [tsd] setting knob
5. Frequency selection switch
6. Tester connection port

| UPB400, UPB630 / Electronic type |

• Protection characteristics and current setting

Model		UPB400						UPB630					
Trip unit		MOR-40-ES[2] / MOR-40-GS						MOR-63-ES[2] / MOR-63-GS					
Rated (CT) current [In] (A)		400						630					
LTD	① Rated current setting [Ir] (A)	Io \ Ir	0.8	0.85	0.9	0.95	1.0	Io \ Ir	0.8	0.85	0.9	0.95	1.0
		0.63	200	215	225	240	250	0.63	320	340	360	380	400
		0.8	255	270	290	300	320	0.8	400	430	450	480	500
		1.0	320	340	360	380	400	1.0	500	540	570	600	630
	② Long time setting [tr]	2-4-6-8-12 sec. at Ir x 600%									Tolerance	±20%	
STD	③ Short time pick-up current [Isd] (A)	Ir x NON-2-4-6-8-10									Tolerance	±15%	
	④ Time delay setting [tsd][1]	0-0.1-0.2-0.3 sec. at definite time-limit section									Tolerance	+50ms, −20ms	
INST	⑥ Instantaneous current setting [Ii] (A)	In x NON-3-6-8-10-11									Tolerance	±20%	
GFT[2]	⑦ Ground fault current [Ig] (A)	In x NON-0.2-0.3-0.4									Tolerance	±15%	
	⑧ Ground fault delay setting [tg]	0.1-0.2-0.3-0.4-0.8 sec. at definite time-limit section									Tolerance	+50ms, −20ms	
PTA	⑫ Pre-trip alarm current [Ip] (A)	Ir x 0.9									Tolerance	±10%	

※ - The default values are underlined. Please check and adjust the setting condition of each characteristic before use.
1] I²t characteristic can be ON or OFF by adjusting the [tsd] knob ❹.
2] GFT protection is option and not applicable for MOR-40-ES and MOR-63-ES trip unit.

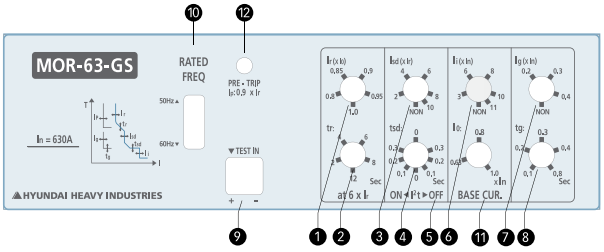

❶ LTD current [Ir] setting knob
❷ LTD time [tr] setting knob
❸ STD current [Isd] setting knob
❹ STD time [tsd] setting knob
❺ I²t ON-OFF indication
❻ INST current [Ii] setting knob
❼ GFT current [Ig] setting knob
❽ GFT time [tg] setting knob
❾ Tester connection port
❿ Frequency selection switch
⓫ Base current [Io] setting knob
⓬ PTA [Ip] LED

| UCB1000, UCB1250 / Electronic type |

• Protection characteristics and current setting

MCCB		UCB1000						UCB1250					
Trip unit		MOR-100-ES[2] / MOR-100-GS						MOR-125-ES[2] / MOR-125-GS					
Rated (CT) current [In] (A)		1000						1250					
LTD	① Rated current setting [Ir] (A)	Io \ Ir	0.8	0.85	0.9	0.95	1.0	Io \ Ir	0.8	0.85	0.9	0.95	1.0
		0.63	505	535	565	600	630	0.63	630	670	710	750	790
		0.8	640	680	720	760	800	0.8	800	850	900	950	1000
		1.0	800	850	900	950	1000	1.0	1000	1060	1125	1190	1250
	② Long time setting [tr]	2-4-6-8-12 sec. at Ir x 600%									Tolerance	±20%	
STD	③ Short time pick-up current [Isd] (A)	Ir x NON-2-4-6-8-10									Tolerance	±15%	
	④ Time delay setting [tsd][1]	0-0.1-0.2-0.3 sec. at definite time-limit section									Tolerance	+50ms, −20ms	
INST	⑥ Instantaneous current setting [Ii] (A)	In x NON-3-6-8-10-11									Tolerance	±20%	
GFT[2]	⑦ Ground fault current [Ig] (A)	In x NON-0.2-0.3-0.4									Tolerance	±15%	
	⑧ Ground fault delay setting [tg]	0.1-0.2-0.3-0.4-0.8 sec. at definite time-limit section									Tolerance	+50ms, −20ms	
PTA	⑫ Pre-trip alarm current [Ip] (A)	Ir x 0.9									Tolerance	±10%	

※ - The default values are underlined. Please check and adjust the setting condition of each characteristic before use.
1] I²t characteristic can be activate by adjusting [tsd] knob ❹.
2] GFT protection is option and not applicable for MOR-100-ES and MOR-125-ES trip unit.

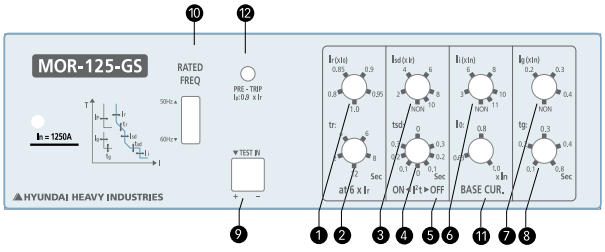

❶ LTD current [Ir] setting knob
❷ LTD time [tr] setting knob
❸ STD current [Isd] setting knob
❹ STD time [tsd] setting knob
❺ I²t ON-OFF indication
❻ INST current [Ii] setting knob
❼ GFT current [Ig] setting knob
❽ GFT time [tg] setting knob
❾ Tester connection port
❿ Frequency selection switch
⓫ Base current [Io] setting knob
⓬ PTA [Ip] LED

Current Setting for UPB type and UCB 1000-1600 type

| Current setting procedure / Electronic type 400-1250A|

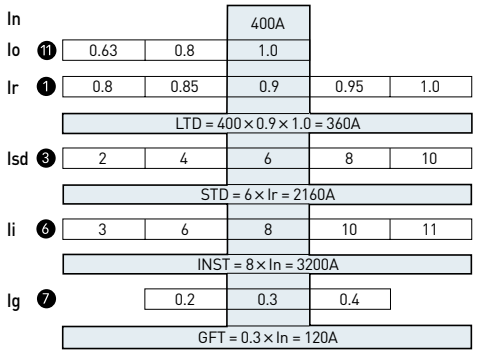

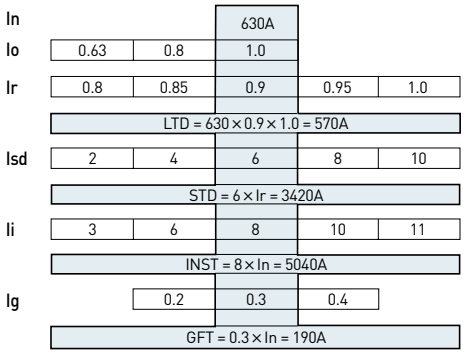

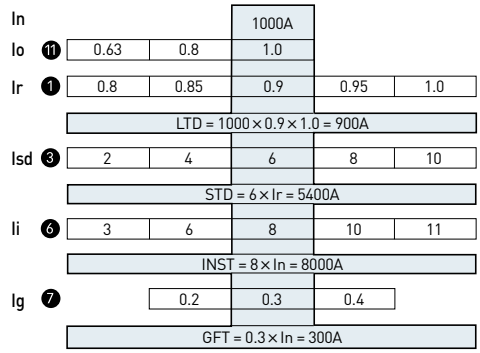

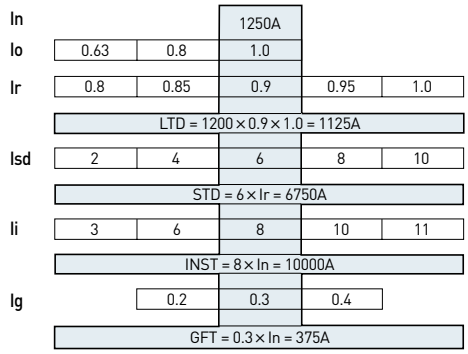

| UCB1600 / Electronic type |

• Protection characteristics and current setting

Rated (CT) current [In] (A)			1600							
LTD	Rated current setting [I_1] (A)	In x	0.4	0.5	0.6	0.7	0.8	0.9	0.95	1.0
			640	800	960	1120	1250	1440	1520	1600
INST	Instantaneous current setting [Ii] (A)		I_1 x 2-3-4-5-6-7-8-10							
LED indication	Red light		I > 0A							
	Green light		I > 0.4 x In							
	Yellow light		I > I_1							

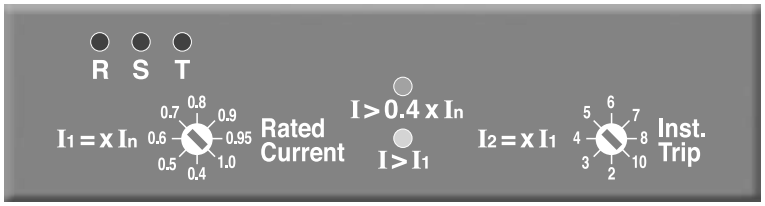

Selection By Application

| Model selection for transformer |

• AC220V

Capacity of transformer (kVA)	Three phase	≤30	≤50	70-100	150-300	500-750	≤1500	≤2000
	Single phase	≤16	≤30	≤50	≤150	≤300		

Breaking capacity of MCCB (kA)(Sym)	2.5	5	10	25	35	42	50	65	85	100	125
MCCB	UAB30C			UAB30R							
	UAB50C			UAB50R	UAB50H, UCB50R		UCB50H		UCB50L		
	UAB60C			UAB60R							
	UAB100C				UAB100S, UCB100R		UCB100S	UCB100H	UCB100L	UPB100H, UPB100L	
	UCB250R					UCB250S	UCB250N	UCB250H	UCB250L	UPB250H, UPB250L	
	UCB400R					UCB400S	UCB400H	UCB400L		UPB400S, UPB400H, UPB400L, UPB400X	
	UCB630R						UCB630S, UCB630H			UPB630S, UPB630H, UPB630L, UPB630X	
	UCB800R						UCB800S, UCB800H			UCB800L	
	UCB1000S, UCB1250S									UCB1000L, UCB1250L	

• AC460V

Capacity of transformer (kVA)	≤50	75-200	≤300	≤750	≤1500	≤2000	≤3000

Breaking capacity of MCCB (kA)(Sym)	1.5	5	10	18	25	35	42	50	65	75	85	100
MCCB	UAB30C		UAB30R									
	UAB50C		UAB50R	UAB50H, UCB50R		UCB50H		UCB50L				
	UAB60C		UAB60R									
	UAB100C			UAB100S, UCB100R		UCB100S	UCB100H	UCB100L	UPB100H			UPB100L
	UCB250R				UCB250S	UCB250N	UCB250H	UCB250L	UPB250H			UPB250L
	UCB400R					UCB400S	UCB400H		UCB400L			UPB400L, UPB400X
	UCB630R						UCB630S		UCB630H	UCB630L		UPB630L, UPB630X
	UCB800R						UCB800S		UCB800H	UCB800L		
	UCB1000S, UCB1250S										UCB1000L,UCB1250L	

| Rated current selection for condenser |

Capacity of condenser (kVAR)	Rated current of MCCB (A)							
	Single phase (1 pole)				Three phase (3 pole)			
	AC220V		AC440V		AC220V		AC440V	
	50Hz	60Hz	50Hz	60Hz	50Hz	60Hz	50Hz	60Hz
5	60	50	30	30	40	50	30	20
10	75	60	40	40	50	50	30	30
15	100	100	60	50	60	60	40	40
20	175	175	75	60	100	75	50	40
25	200	200	100	100	100	100	50	50
30	225	225	100	100	175	150	60	60
40	400	400	150	125	200	200	100	75
50	400	400	175	175	225	225	100	100
75	600	500	300	300	400	400	150	150
100	800	800	400	400	400	400	225	225
150	1000	1000	600	500	600	600	300	300
200	-	1200	800	800	800	800	400	400
300	-	-	1000	1000	-	-	600	600
400	-	-	-	-	-	-	-	800

※ -The start-up inrush current is about 10 times of rated current.
-The mentioned value can be applied to maximum rated current of MCCB.
-The rated current of MCCB is recommended to be 150% of rated current of condenser.

Selection By Application

| Model selection for lighting and heater |

• The maximum operational current shall not exceed 80% of MCCB rated current.

Maximum operational current (A)	Rated current of MCCB (A)	Breaking capacity (kA) sym 2.5 / 5 / 10 / 25 / 35 / 50 / 65 / 85 / 100 / 125
12	15	UAB30C / UAB30R / UAB50H, UCB50R / UCB50H / UCB50L
16	20	
24	30	
32	40	UAB50C / UAB50R
40	50	
48	60	UAB60C / UAB60R / UAB100S, UCB100R / UCB100S / UCB100H / UCB100L / UPB100H, UPB100L
60	75	UAB100C
80	100	
100	125	UCB250R / UCB250S / UCB250N / UCB250H / UCB250L / UPB250H, UPB250L,
120	150	
140	175	
160	200	
180	225	
200	250	UCB400R / UCB400S / UCB400H / UCB400L / UPB400S, UPB400H, UPB400L, UPB400X
240	300	
280	350	
320	400	
400	500	UCB630R / UCB630S, UCB630H / UPB630S, UPB630H, UPB630L, UPB630X
500	630	
560	700	UCB800R / UCB800S, UCB800H / UCB800L
640	800	
800	1000	UCB1000S / UCB1000L
1000	1250	UCB1250S / UCB1250L

• AC460V

Maximum operational current (A)	Rated current of MCCB (A)	Breaking capacity (kA) sym 1.5 / 5 / 10 / 18 / 25 / 35 / 42 / 50 / 65 / 75 / 85 / 100
12	15	UAB30C / UAB30R / UAB50H UCB50R / UCB50H / UCB50L
16	20	
24	30	
32	40	UAB50C / UAB50R
40	50	
48	60	UAB60C / UAB60R / UAB100S UAB100R / UCB100S / UCB100H / UCB100L / UPB100H / UPB100L
60	75	UAB100C
80	100	
100	125	UCB250R / UCB250S / UCB250N / UCB250H / UCB250L / UPB250H / UPB250L
120	150	
140	175	
160	200	
180	225	
200	250	UCB400R / UCB400S / UCB400H / UCB400L / UPB400L, UPB400X
240	300	
280	350	
320	400	
400	500	UCB630R / UCB630S / UCB630H / UCB630L / UPB630L, UPB630X
500	630	
560	700	UCB800R / UCB800S / UCB800H / UCB800L
640	800	
800	1000	UCB1000S / UCB1000L
1000	1250	UCB1250S / UCB1250L

| Rated current selection for motor and other loads |

Circuit diagram	Condition	Permissible current of cable [Iw]	Rated current of MCCB [In]
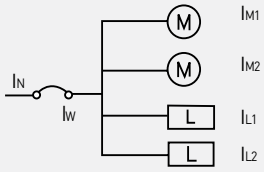 IM : Load current of motor IL : Load current of other loads	$\Sigma I_M \leqq \Sigma I_L$	$I_W \geqq \Sigma I_M + \Sigma I_L$	Less value among $I_N \leqq 3\Sigma I_M + \Sigma I_L$ or $I_N \leqq 2.5 I_W$. In case of $I_W > 100A$, when calculated value is not matched with the rated current of MCCB, it is recommended to select the right above value.
	$50A \geqq \Sigma I_M \rightarrow \Sigma I_L$	$I_W \geqq 1.25\Sigma I_M + \Sigma I_L$	
	$50A < \Sigma I_M > \Sigma I_L$	$I_W \geqq 1.1\Sigma I_M + \Sigma I_L$	

Selection By Application

▪ Rated current of MCCB for AC220V three phase induction motor

Total capacity of motors (below kW)	Maximum operational current (below A)	Capacity of the biggest motor: Capacity of motor (kW) / Full load current (A)																
		0.75 / 4.8	1.5 / 8	2.2 / 11.1	3.7 / 17.4	5.5 / 26	7.5 / 34	11 / 48	15 / 65	18.5 / 79	22 / 93	30 / 125	37 / 160	45 / 190	5 / 230	75 / 310	90 / 360	110 / 440	132 / 500
3	15	20	30	30															
4.5	20	30	30	30	50														
6.3	30	40	40	40	50	60													
8.2	40	50	50	50	50	75	100												
12	50	60	60	60	60	75	100												
15.7	75	100	100	100	100	100	100	125	150										
19.5	90	100	100	100	100	100	100	125	150	175									
23.2	100	125	125	125	125	125	125	125	150	175	200								
30	125	150	150	150	150	150	150	150	150	175	225								
37.5	150	175	175	175	175	175	175	175	175	200	225	300							
45	175	200	200	200	200	200	200	200	200	200	225	300	400						
52.5	100	225	225	225	225	225	225	225	225	225	225	300	400	500					
63.7	150	300	300	300	300	300	300	300	300	300	300	300	400	500	500				
75	300	350	350	350	350	350	350	350	350	350	350	350	400	500	500				
86.2	350	400	400	400	400	400	400	400	400	400	400	400	400	500	500	600			
97.5	400	500	500	500	500	500	500	500	500	500	500	500	500	500	500	600	700		
112.5	450	500	500	500	500	500	500	500	500	500	500	500	500	500	500	700	700		
125	500	600	600	600	600	600	600	600	600	600	600	600	600	600	600	700	700	1000	
150	600	700	700	700	700	700	700	700	700	700	700	700	700	700	700	700	800	1000	1000
175	700	800	800	800	800	800	800	800	800	800	800	800	800	800	800	800	800	1000	1000
220	800	900	900	900	900	900	900	900	900	900	900	900	900	900	900	900	900	900	1000

※ -The rated currents are for MCCBs.
-The mentioned values are applicable when MCCB trips within 10 sec. at 600% of full load current and the start-up inrush current is within 1700% of full load current.
-Above selection is also applied in case that several loads starts up at same time.

▪ Rated current of MCCB for AC440V three phase induction motor

Total capacity of motors (below kW)	Maximum operational current (below A)	Capacity of the biggest motor: Capacity of motor (kW) / Full load current (A)																	
		0.75 / 2.4	1.5 / 4	2.2 / 5.5	3.7 / 8.7	5.5 / 13	7.5 / 17	11 / 24	15 / 32	18.5 / 39	22 / 46	30 / 62	37 / 80	45 / 95	55 / 115	75 / 155	90 / 180	110 / 220	132 / 250
3	7.5	15	15	15															
4.5	10	15	15	15	30														
6.3	15	20	20	20	30	40													
8.2	20	30	30	30	30	40	50												
12	25	30	30	30	30	40	50												
15.7	38	50	50	50	50	50	50	60	75										
19.5	45	50	50	50	50	50	50	60	75	100									
23.2	50	60	60	60	60	60	60	60	75	100	125								
30	63	75	75	75	75	75	75	75	100	100	125								
37.5	75	100	100	100	100	100	100	100	100	100	125	150							
45	88	100	100	100	100	100	100	100	100	100	125	150	175						
52.5	100	125	125	125	125	125	125	125	125	125	125	150	175	225					
63.7	125	150	150	150	150	150	150	150	150	150	150	150	200	225	250				
75	150	175	175	175	175	175	175	175	175	175	175	175	200	225	250				
86.2	175	200	200	200	200	200	200	200	200	200	200	200	200	225	300	350			
97.5	200	225	225	225	225	225	225	225	225	225	225	225	225	225	300	350	400		
112.5	225	250	250	250	250	250	250	250	250	250	250	250	250	250	300	350	400		
125	250	300	300	300	300	300	300	300	300	300	300	300	300	300	300	350	400	500	
150	300	350	350	350	350	350	350	350	350	350	350	350	350	350	350	350	400	500	500
175	350	400	400	400	400	400	400	400	400	400	400	400	400	400	400	400	500	500	500
200	400	500	500	500	500	500	500	500	500	500	500	500	500	500	500	500	500	500	500
250	500	600	600	600	600	600	600	600	600	600	600	600	600	600	600	600	600	600	600
300	600	700	700	700	700	700	700	700	700	700	700	700	700	700	700	700	700	700	700
350	700	800	800	800	800	800	800	800	800	800	800	800	800	800	800	800	800	800	800
400	700	800	800	800	800	800	800	800	800	800	800	800	800	800	800	800	800	800	800
450	900	1000	1000	1000	1000	1000	1000	1000	1000	1000	1000	1000	1000	1000	1000	1000	1000	1000	1000
500	1000	1200	1200	1200	1200	1200	1200	1200	1200	1200	1200	1200	1200	1200	1200	1200	1200	1200	1200

※ -The rated currents are for MCCBs.
-The mentioned values are applicable when MCCB trips within 10 sec. at 600% of full load current and the start-up inrush current is within 1700% of full load current.
-Above selection is also applied in case that several loads starts up at same time.

Insulation Distance

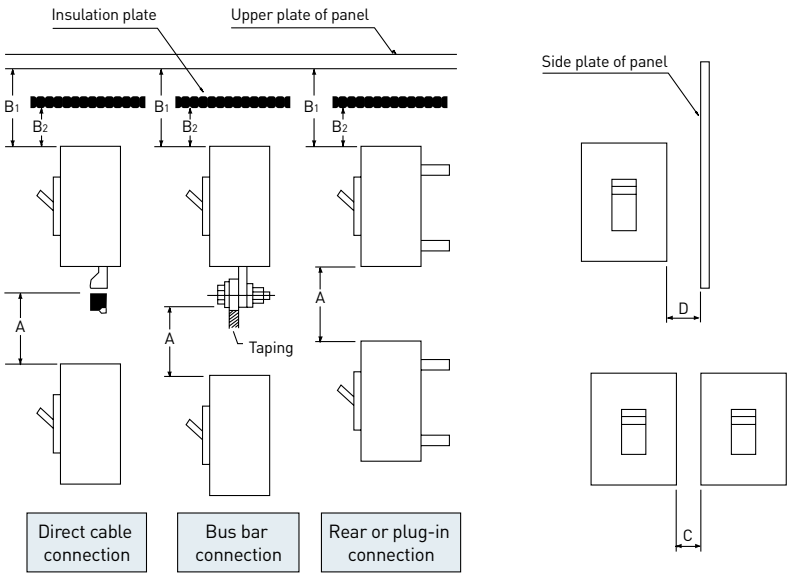

Applicable MCCB	Distances				
	A	B1	B2	C	D
UAB30C, UAB30R, UAB50C, UAB50R, UAB50S, UAB50H, UAB60C, UAB60R, UAB100C, UAB100R, UAB100S / UAD50C, UAD50S, UAD100R	75	50	30	from 0	25
UCB50R, UCB50H, UCB50L, UCB100R, UCB100S, UCB100H, UCB100L / UCD50H, UCD100R, UCD100H	80	50	30	from 0	25
UCB250R	80	60	50	from 0	25
UCB160H, UCB160L, UCB250S, UCB250N, UCB250H, UCB250L / UCD160H, UCD250S, UCD250H	80	60	50	from 0	40
UCB400R, UCB400S, UCB400H, UCB400L, UCB630R, UCB630S, UCB630H, UCB630L, UCB800R, UCB800S, UCB800H, UCB800L / UCD400S, UCD630S, UCD800S	100	100	80	from 0	80
UCB1000S, UCB1000L, UCB1250S, UCB1250L, UCB1600S / UCD1000S, UCD1250S	50	120	80	from 0	80
UPB100S, UPB100H, UPB100L, UPB100X / UPD100S	80	50	30	from 0	10
UPB160S, UPB160H, UPB160L, UPB160X, UPB250S, UPB250H, UPB250L, UPB250X / UPD160S, UPD250S	100	100	70	from 0	10
UPB400S, UPB400H, UPB400L, UPB400X, UPB630S, UPB630H, UPB630L, UPB630X / UPD400S, UPD630S	120	100	80	from 0	80
HBL103U, HBL103UM, HBL103UQ, HBL103UMQ	80	50	30	from 0	10
HBL203U, HBL203UM, HBL203UQ, HBL203UMQ	100	100	70	from 0	10

Cascading Table

| AC240V |

Upstream →

Downstream ↓

Recognition category	Model	Rated current (A)	Breaking capacity [Icu] (kA r.m.s)	UAB-C	UAB-R				UAB/UCB-S				
				UAB100C	UCB250R	UCB400R	UCB630R	UCB800R	UAB100S	UCB250S	UCB400S	UCB630S	UCB800S
				5-100	125-250	250-400	500,630	700,800	15-100	125-250	250-400	500,630	700,800
				25	35	35	50	50	50	50	50	100	100
UAB-C	UAB30C	3-30	10	25	30	30			35	35	35		
	UAB50C	5-50	10	25	30	30			35	35	35		
	UAB60C	5-60	10	25	30	30			35	35	35		
	UAB100C	5-100	25		35	35	42	42		42	42	65	65
UAB/UCB-R	UAB30R	5-30	25		35	35	42	42	42	42	42	65	65
	UAB50R	5-50	25		35	35	42	42	42	42	42	65	65
	UAB60R	5-60	25		35	35	42	42	42	42	42	65	65
	UAB100R	15-100	42				50	50		50	50	75	75
	UCB50R	15-50	50									85	85
	UCB100R	15-100	50									85	85
	UCB250R	125-250	35				50	50			50	65	65
	UCB400R	250-400	35					50					65
UAB/UCB-S	UAB50S	15-50	42				50	50	50	50	50	75	75
	UAB100S	15-100	50									85	85
	UCB100S	15-100	65									85	85
	UCB250S	125-250	50									85	85
	UCB400S	250-400	50										85
UAB/UCB-H	UAB50H	15-50	50										
	UCB50H	15-50	85									100	100
	UCB100H	15-125	85									100	100
	UCB250H	125-250	85									100	100
	UCB400H	250-400	85										100
UCB-L	UCB50L	15-50	100										
	UCB100L	15-125	100										
	UCB250L	125-250	100										
	UCB400L	250-400	125										
UPB-H	UPB100H	15-125	130										
	UPB250H	100-250	130										
UPB-L	UPB100L	15-125	150										
	UPB250L	100-250	150										

UCB-H					UCB-L					UPB-H		UPB-L	
UCB100H	UCB250H	UCB400H	UCB630H	UCB800H	UCB100L	UCB250L	UCB400L	UCB630L	UCB800L	UPB100H	UPB250H	UPB100L	UPB250L
15-125	125-250	250-400	500,630	700,800	15-125	125-250	250-400	500,630	700,800	15-125	100-250	15-125	100-250
85	85	85	100	100	100	100	125	125	125	130	130	150	150
50	50	50			50	50	65						
50	50	50			50	50	65						
50	50	50			50	50	65						
	65	65	65	65		65	85	85	85				
65	65	65	65	65	65	65	85	85	85	85	85	100	100
65	65	65	65	65	65	65	85	85	85	85	85	100	100
65	65	65	65	65	65	65	85	85	85	85	85	100	100
	75	75	75	75		75	100	100	100		100		130
85	85	85	85	85	100	100	100	100	100	100	100	130	130
	85	85	85	85		100	100	100	100		100		130
		65	65	65			100	100	100				
				65					100				
	85	85	75	75	100	100	100	100	100	100	100	130	130
	85	85	85	85		100	125	125	125		100		130
	85	85	85	85		100	125	125	125		100		130
		85	85	85			125	125	125				
				85					125				
										130	130	130	130
			100	100	100	100	125	125	125	130	130	150	150
			100	100			125	125	125		130		150
			100	100			125	125	125				
				100					125				
							125	125	125	130	130	150	150
							125	125	125		130		150
							125	125	125				
												150	150
													150

Cascading Table

| AC415V |

Upstream →

Downstream ↓

Recognition category	Model	Rated current (A)	Breaking capacity [Icu] (kA r.m.s)	UAB-C	UAB-R				UAB/UCB-S				
				UAB100C	UCB250R	UCB400R	UCB630R	UCB800R	UAB100S	UCB250S	UCB400S	UCB630S	UCB800S
				5-100	125-250	250-400	500,630	700,800	15-100	125-250	250-400	500,630	700,800
				10	18	30	45	45	30	25	42	65	65
UAB-C	UAB30C	3-30	5	10	7.5	10			10	10			
	UAB50C	5-50	5	10	7.5	10			10	10			
	UAB60C	5-60	5	10	7.5	10			10	10			
	UAB100C	5-100	10		14	14	14	14		18	18	30	30
UAB/UCB-R	UAB30R	5-30	10		14	14	14	14	18	18	18	30	30
	UAB50R	5-50	10		14	14	14	14	18	18	18	30	30
	UAB60R	5-60	10		14	14	14	14	18	18	18	30	30
	UAB100R	15-100	25			30	35	35			35	42	42
	UCB50R	15-50	25			30	35	35	30		35	42	42
	UCB100R	15-100	25			30	35	35			35	42	42
	UCB250R	125-250	18			30	35	35			30	35	35
	UCB400R	250-400	30					35					50
UAB/UCB-S	UAB50S	15-50	25			30	35	35	30		35	42	42
	UAB100S	15-100	30				35	35			35	42	42
	UCB100S	15-100	36				45	45			42	50	50
	UCB250S	125-250	25			30	35	35			35	42	42
	UCB400S	250-400	42					45					65
UAB/UCB-H	UAB50H	15-50	30				35	35			42	42	42
	UCB50H	15-50	42				45	45				50	50
	UCB100H	15-125	42				45	45				50	50
	UCB250H	125-250	42				45	45				50	50
	UCB400H	250-400	65										
UCB-L	UCB50L	15-50	50									65	65
	UCB100L	15-125	50									65	65
	UCB250L	125-250	50									65	65
	UCB400L	250-400	100										
UPB-H	UPB100H	15-125	100										
	UPB250H	100-250	100										
UPB-L	UPB100L	15-125	130										
	UPB250L	100-250	130										

UCB-H					UCB-L					UPB-H		UPB-L	
UCB100H	UCB250H	UCB400H	UCB630H	UCB800H	UCB100L	UCB250L	UCB400L	UCB630L	UCB800L	UPB100H	UPB250H	UPB100L	UPB250L
15-125	125-250	250-400	500,630	700,800	15-125	125-250	250-400	500,630	700,800	15-125	100-250	15-125	100-250
42	42	65	85	85	50	50	100	100	100	100	100	130	130
14	14	18			25	25	25						
14	14	18			25	25	25						
14	14	18			25	25	25						
	18	30	30	30		30	35	35	35				
18	18	30	30	30	30	30	35	35	35	35	35	42	42
18	18	30	30	30	30	30	35	35	35	35	35	42	42
18	18	30	30	30	30	30	35	35	35	35	35	42	42
	35	42	50	50		35	50	50	50		50		50
35	35	42	50	50	42	42	50	50	50	50	50	50	50
	35	42	50	50		42	50	50	50		50		50
		35	42	42			42	42	42				
				50					50				
35	35	42	50	50	42	42	50	50	50	50	50	50	50
	42	45	50	50		50	65	65	65		50		65
	42	50	65	65		50	75	75	75		65		65
		42	50	50			50	50	50				
				75					85				
42	42	45	50	50	50	50	65	65	65	50	50	65	65
		60	75	75	50	50	85	85	85	85	85	85	85
		60	75	75		50	85	85	85		85		85
		60	75	75			85	85	85				
				85					100				
		65	85	85			100	100	100	100	100	100	100
		65	85	85			100	100	100		100		100
		65	85	85			100	100	100				
												130	130
													130

Cascading Table

| AC440V |

Upstream →

Downstream ↓

Recognition category	Model			UAB-C	UAB-R				UAB/UCB-S				
				UAB100C	UCB250R	UCB400R	UCB630R	UCB800R	UAB100S	UCB250S	UCB400S	UCB630S	UCB800S
				5-100	125-250	250-400	500,630	700,800	15-100	125-250	250-400	500,630	700,800
		Rated current (A)	Breaking capacity [Icu] (kA r.m.s)	10	18	25	35	35	25	25	35	50	50
UAB-C	UAB30C	3-30	5	7.5	7.5	7.5			7.5	7.5			
	UAB50C	5-50	5	7.5	7.5	7.5			7.5	7.5			
	UAB60C	5-60	5	7.5	7.5	7.5			7.5	7.5			
	UAB100C	5-100	10		10	10	10	10		14	14	21	21
UAB/UCB-R	UAB30R	5-30	10		10	10	10	10	14	14	14	21	21
	UAB50R	5-50	10		10	10	10	10	14	14	14	21	21
	UAB60R	5-60	10		10	10	10	10	14	14	14	21	21
	UAB100R	15-100	21			25	30	30		25	30	30	35
	UCB50R	15-50	25				35	35			35	35	42
	UCB100R	15-100	25				35	35			35	35	42
	UCB250R	125-250	18			25	25	25			25	35	35
	UCB400R	250-400	25					35					42
UAB/UCB-S	UAB50S	15-50	21			25	30	30	25	25	30	30	35
	UAB100S	15-100	25				35	35			35	35	42
	UCB100S	15-100	35									42	50
	UCB250S	125-250	25				35	35			35	35	42
	UCB400S	250-400	35									42	50
UAB/UCB-H	UAB50H	15-50	25				35	35			35	35	50
	UCB50H	15-50	42									50	50
	UCB100H	15-125	42									50	50
	UCB250H	125-250	42									50	50
	UCB400H	250-400	50										
UCB-L	UCB50L	15-50	50										
	UCB100L	15-125	50										
	UCB250L	125-250	50										
	UCB400L	250-400	85										
UPB-H	UPB100H	15-125	85										
	UPB250H	100-250	85										
UPB-L	UPB100L	15-125	100										
	UPB250L	100-250	100										

UCB-H					UCB-L					UPB-H		UPB-L	
UCB100H	UCB250H	UCB400H	UCB630H	UCB800H	UCB100L	UCB250L	UCB400L	UCB630L	UCB800L	UPB100H	UPB250H	UPB100L	UPB250L
15-125	125-250	250-400	500,630	700,800	15-125	125-250	250-400	500,630	700,800	15-125	100-250	15-125	100-250
42	**42**	**50**	**65**	**65**	**50**	**50**	**85**	**85**	**85**	**85**	**100**	**85**	**130**
10	10	14			18	18	18						
10	10	14			18	18	18						
10	10	14			18	18	18						
	14	25	25	25		25	30	30	30				
14	14	25	25	25	25	25	30	30	30	30	35	30	35
14	14	25	25	25	25	25	30	30	30	30	35	30	35
14	14	25	25	25	25	25	30	30	30	30	35	30	35
	30	35	35	35		30	35	35	35			45	45
35	35	35	35	35	40	40	45	45	45	45	45	45	45
	35	35	35	35		40	45	45	45			45	45
		30	30	30			30	30	30				
				40					42				
30	30	35	35	35	38	38	42	42	42	45	45	45	45
	35	38	40	40		45	50	50	50			45	50
	42	50	50	50		45	55	55	55			50	50
		38	40	40			45	45	45				
				55					55				
35	35	40	45	45	42	42	45	45	45	35	45	35	45
		50	55	55	50	50	65	65	65	65	65	65	65
		50	55	55		50	65	65	65			65	65
		50	55	55			65	65	65				
				65					85				
			65	65			85	85	85	85	85	85	85
			65	65			85	85	85			85	85
			65	65			85	85	85				

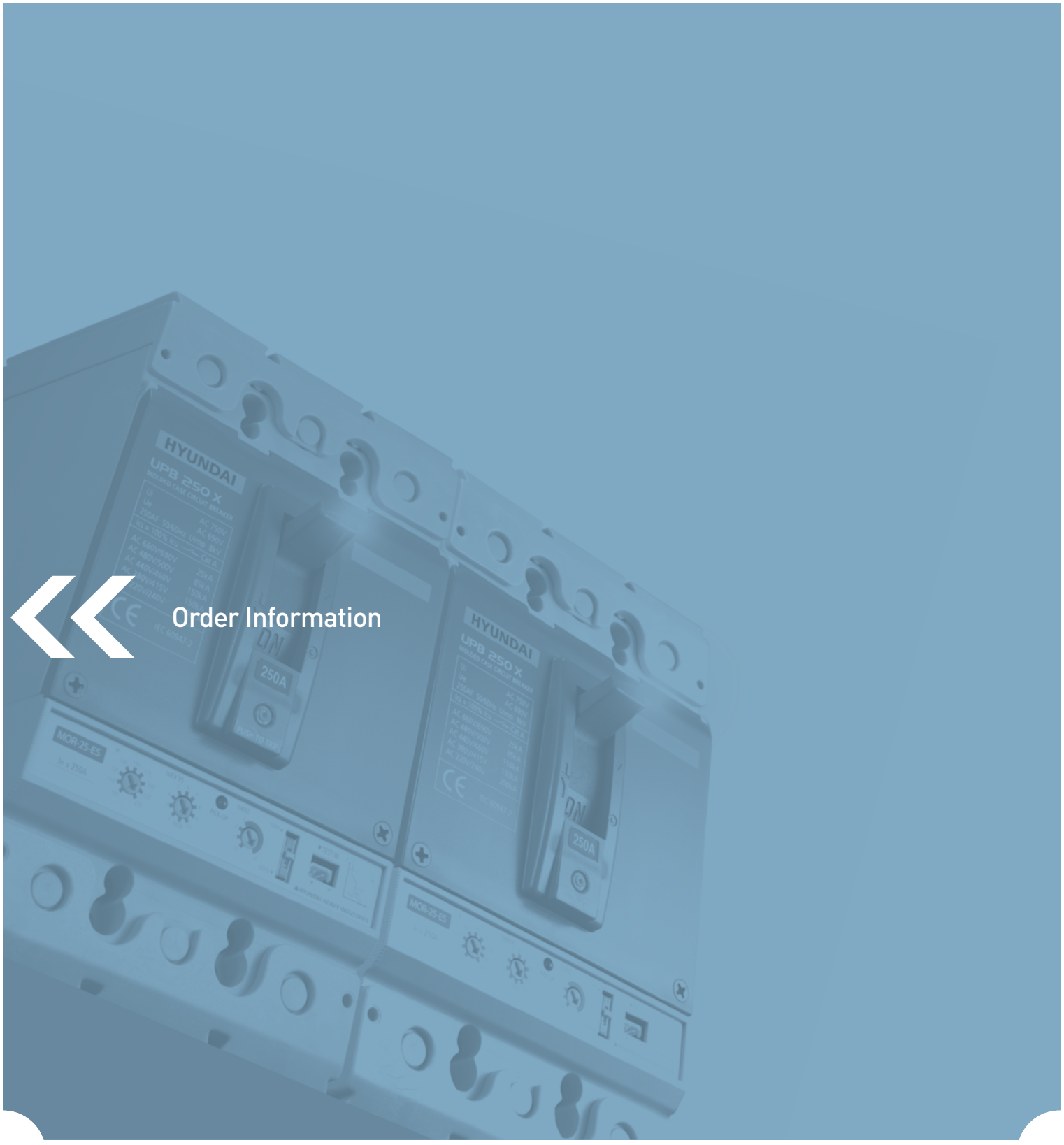

Order Information

Order Information

◆ Fixed thermal & fixed instantaneous / UAB, UCB, UPB type

UPB250X **3P** **T4** **S** **00** **00** **C** **00250**

Type	Code
UAB	UAB30C ⋮ UAB100S
UCB	UCB50R ⋮ UCB800L
UPB	UPB100S ⋮ UPB250X

※ For the applicable breaker, please refer to page 12-24.

Code	Pole
2P[1]	2 pole
3P	3 pole
4P[2]	4 pole

※ 1] "2P" (2 pole) is not applicable to UPB.
2] "4P" (4 pole) is not applicable to UAB30.

Code	Compensating temperature
T4	40/45℃
T5[1]	50℃

※ 1] "T5" (50°C) is not applicable to hydraulic magnetic type UAB30C, UAB30R, UAB50C, UAB50R, UAB60C, UAB60R & UAB100C.

Code	Terminal connection
Direct mounting	
S[1]	Screw
B[2]	Bus bar
Plug-in mounting[3]	
X[4]	for both line & load side without accessories
P[5]	for both line & load side with accessories and connection block
F[6]	for line side only

※ 1] "S" (screw terminal connection) is default for whole range.
2] "B" (bus bar terminal connection) is available for 250AF and above breaker.
- Bus bar [TBB] can be ordered separately.
For details, please refer to page 215.
3] Plug-in mounting is available for 3pole breaker only.
- Mounting base [TDM] and components for plug-in mounting shall be ordered separately.
For details, please refer to page 209.
4] - "X" is recommended when the internal signal accessory does not need to be wired through the mounting base.
- "X0000" code is only applicable when the accessories are not mounted.
5] - "P" is recommended when the internal signal accessory shall be plug-in also. Internal signal accessory shall be ordered along with breaker for wiring before ex-work.
- "P0000" code is not applicable. "P" code is only applicable when the accessories are mounted.
- We do not provide connection block seperately.
6] "F" (plug-in mounting for line side only) is recommended when the screw terminal connection is required at load side.

Code	Internal accessory
00[1]	without
Auxiliary switch (AUX)	
10	AUX 1C
20	AUX 2C
Trip alarm switch (ALT)	
01	ALT 1C
Auxiliary switch (AUX) & Trip alarm switch (ALT)	
11	AUX 1C & ALT 1C
21	AUX 2C & ALT 1C

※ 1] Default for whole range
- For the applicable accessory to each breaker, please refer to page 136-163.
- For "P" type plug-in mounting, internal accessory shall be ordered.
- Internal accessory can be ordered separately.
For details, please refer to page 192-193.

Code	Internal accessory
00[1]	without
Shunt trip (SHT)	
S1	SHT AC110V
S2	SHT AC220V
S3	SHT AC380V
S4	SHT AC440V
S5	SHT DC24V
S6	SHT DC110V
Under voltage trip (UVT)	
U1	UVT AC110V
U2	UVT AC220V
U3	UVT AC380V
U4	UVT AC440V
U5	UVT DC24V
U6	UVT DC110V

※ 1] Default for whole range
- For the applicable accessory to each breaker, please refer to page 136-163.
- For "P" type plug-in mounting, internal accessory shall be ordered.
- Internal accessory can be ordered separately.
For details, please refer to page 192-193.

Code	Frequency
C	50/60Hz

Code	Rated current
00003 ⋮ 00800	3A ⋮ 800A

※ For the applicable rated current to each breaker, please refer to page 12-24.

Order Information

◆ Adjustable thermal - UAB, UCB, UPB type

UPB250X	3P	T4	S	00	00	C	00250	F

Type	Code
UAB	UAB50S
	UAB50H
	UAB100R
	UAB100S
UCB	UCB50H
	UCB50L
	UCB100R ⋮ UCB800L
UPB	UPB100S ⋮ UPB250X

※ For the applicable breaker, please refer to page 12-24.

Code	Pole
2P[1]	2 pole
3P	3 pole
4P	4 pole

※ 1) "2P" (2 pole) is available for UCB only.

Code	Compensating temperature
T4	40/45℃
T5	50℃

Code	Terminal connection
Direct mounting	
S[1]	Screw
B[2]	Bus bar
Plug-in mounting[3]	
X[4]	for both line & load side without accessories
P[5]	for both line & load side with accessories and connection block
F[6]	for line side only

※ 1) "S" (screw terminal connection) is default for whole range.
2) "B" (bus bar terminal connection) is available for 250AF and above breaker.
- Bus bar [TBB] can be ordered separately. For details, please refer to page 215.
3) Plug-in mounting is available for 3 pole breaker only.
- Mounting base [TDM] and components for plug-in mounting shall be ordered separately. For details, please refer to page 209.
4) - "X" is recommended when the internal signal accessory does not need to be wired through the mounting base.
- "X0000" code is only applicable when the accessories are not mounted.
5) - "P" is recommended when the internal signal accessory shall be plug-in also. Internal signal accessory shall be ordered along with breaker for wiring before ex-work.
- "P0000" code is not applicable. "P" code is only applicable when the accessories are mounted.
- We do not provide connection block seperately.
6) "F" (plug-in mounting for line side only) is recommended when the screw terminal connection is required at load side.

Code	Internal accessory
00[1]	without
Shunt trip (SHT)	
S1	SHT AC110V
S2	SHT AC220V
S3	SHT AC380V
S4	SHT AC440V
S5	SHT DC24V
S6	SHT DC110V
Under voltage trip (UVT)	
U1	UVT AC110V
U2	UVT AC220V
U3	UVT AC380V
U4	UVT AC440V
U5	UVT DC24V
U6	UVT DC110V

※ 1) Default for whole range
- For the applicable accessory to each breaker, please refer to page 138-163.
- For "P" type plug-in mounting, internal accessory shall be ordered.
- Internal accessory can be ordered separately. For details, please refer to page 192-193.

Code	Internal accessory
00[1]	without
Auxiliary switch (AUX)	
10	AUX 1C
20	AUX 2C
Trip alarm switch (ALT)	
01	ALT 1C
Auxiliary switch (AUX) & Trip alarm switch (ALT)	
11	AUX 1C & ALT 1C
21	AUX 2C & ALT 1C

※ 1) Default for whole range
- For the applicable accessory to each breaker, please refer to page 138-163.
- For "P" type plug-in mounting, internal accessory shall be ordered.
- Internal accessory can be ordered separately.
For details, please refer to page 192-193.

Code	Rated current
00005 ⋮ 00800	5A ⋮ 800A

※ For the applicable rated current to each breaker, please refer to page 12-24.

Code	Frequency
C	50/60Hz

Code	Instantaneous characteristic
F	Fixed instantaneous
H[1]	Adjustable instantaneous

※ 1) "H" (adjustable instantaneous) is available for UPB160 & UPB250.

◆ Electronic / UCB, UPB type

UPB630X **3P** **ES** **S** **00** **00** **X** **00630**

Type	Code
UCB	UCB1000S
	UCB1000L
	UCB1250S
	UCB1250L
	UCB1600S
UPB	UPB100S ⋮ UPB630X

※ For the applicable breaker, please refer to page 12-24.

Code	Pole
3P	3 pole
4P[1]	4 pole

※ 1] "4P" (4 pole) is not applicable to UCB1600S.

Code	Protection characteristic
ES[1]	LTD, STD, INST trip & PTA
EG[2]	LTD, STD, INST, GFT trip & PTA

※ 1] "ES" (LTD, STD, INST trip & PTA) is default for whole range.
- STD trip & PTA are not applicable to UCB1600S.

2] "EG" (LTD, STD, INST, GFT trip & PTA) is available for UCB1000, UCB1250, UPB400 & UPB630.

Code	Terminal connection
Direct mounting	
S[1]	Screw
B[2]	Bus bar
Plug-in mounting[3]	
X[4]	for both line & load side without accessories
P[5]	for both line & load side with accessories and connection block
F[6]	for line side only

※ 1] "S" (screw terminal connection) is default for whole range.

2] "B" (bus bar terminal connection) is default for UCB.
- "B" (bus bar terminal connection) is available for 250AF and above breaker.
- Bus bar [TBB] for UPB can be ordered separately.
For details, please refer to page 215.

3] Plug-in mounting is available for 3 pole breaker only.
- Mounting base [TDM] and components for plug-in mounting shall be ordered separately.
For details, please refer to page 209.

4] - "X" is recommended when the internal signal accessory does not need to be wired through the mounting base.
- "X0000" code is only applicable when the accessories are not mounted.

5] - "P" is recommended when the internal signal accessory shall be plug-in also. Internal signal accessory shall be ordered along with breaker for wiring before ex-work.
- "P0000" code is not applicable. "P" code is only applicable when the accessories are mounted.
- We do not provide connection block seperately.

6] "F" (plug-in mounting for line side only) is recommended when the screw terminal connection is required at load side.

Code	Internal accessory
00[1]	without
Auxiliary switch (AUX)	
10	AUX 1C
20	AUX 2C
30	AUX 3C
40	AUX 4C
Trip alarm switch (ALT)	
01	ALT 1C
Auxiliary switch (AUX) & Trip alarm switch (ALT)	
11	AUX 1C & ALT 1C
21	AUX 2C & ALT 1C
31	AUX 3C & ALT 1C

※ 1] Default for whole range
- For the applicable accessory to each breaker, please refer to page 154-165.
- For "P" type plug-in mounting, internal accessory shall be ordered.
- Internal accessory can be ordered separately.
For details, please refer to page 192-193.

Code	Internal accessory
00[1]	without
Shunt trip (SHT)	
S1	SHT AC110V
S2	SHT AC220V
S3	SHT AC380V
S4[2]	SHT AC440V
S5	SHT DC24V
S6	SHT DC110V
Under voltage trip (UVT)	
U1[2]	UVT AC110V
U2	UVT AC220V
U3	UVT AC380V
U4[2]	UVT AC440V
U5[2]	UVT DC24V
U6[2]	UVT DC110V

※ 1] Default for whole range
- For the applicable accessory to each breaker, please refer to page 154-165.
- For "P" type plug-in mounting, internal accessory shall be ordered.
- Internal accessory can be ordered separately.
For details, please refer to page 192-193.

Code	Frequency
C[1]	50/60Hz
X	50Hz
Y	60Hz

※ 1] Only UCB1600S is common use for both 50Hz & 60Hz ("C").

Code	Rated current
00100 ⋮ 01600	100A ⋮ 1600A

※ For the applicable rated current to each breaker, please refer to page 12-24.

Order Information

◆ Motor protection / UPB type

UPB250L **3P** **MP** **S** **00** **00** **C** **00250**

Type	Code
UPB	UPB100H
	UPB100L
	UPB250H
	UPB250L

※ For the applicable breaker, please refer to page 12-24.

Code	Pole
3P	3 pole

Code	Trip mechanism
MP	Adjustable instantaneous only

Code	Terminal connection
Direct mounting	
S[1]	Screw
Plug-in mounting[2]	
X[3]	for both line & load side without accessories
P[4]	for both line & load side with accessories and connection block
F[5]	for line side only

※ 1] "S" (screw terminal connection) is default for whole range.
- Bus bar [TBB] can be ordered separately. For details, please refer to page 215.

2] Plug-in mounting is available for 3 pole breaker only.
- Mounting base [TDM] and components for plug-in mounting shall be ordered separately. For details, please refer to page 209.

3] - "X" is recommended when the internal signal accessory does not need to be wired through the mounting base.
- "X0000" code is only applicable when the accessories are not mounted.

4] - "P" is recommended when the internal signal accessory shall be plug-in also. Internal signal accessory shall be ordered along with breaker for wiring before ex-work.
- "P0000" code is not applicable. "P" code is only applicable when the accessories are mounted.
- We do not provide connection block seperately.

5] "F" (plug-in mounting for line side only) is recommended when the screw terminal connection is required at load side.

Code	Internal accessory
00[1]	without
Auxiliary switch (AUX)	
10	AUX 1C
20	AUX 2C
Trip alarm switch (ALT)	
01	ALT 1C
Auxiliary switch (AUX) & Trip alarm switch (ALT)	
11	AUX 1C & ALT 1C
21	AUX 2C & ALT 1C

※ 1] Default for whole range
- For the applicable accessory to each breaker, please refer to page 162-163.
- For "P" type plug-in mounting, internal accessory shall be ordered.
- Internal accessory can be ordered separately.
For details, please refer to page 192-193.

Code	Internal accessory
00[1]	without
Shunt trip (SHT)	
S1	SHT AC110V
S2	SHT AC220V
S3	SHT AC380V
S4	SHT AC440V
S5	SHT DC24V
S6	SHT DC110V
Under voltage trip (UVT)	
U1	UVT AC110V
U2	UVT AC220V
U3	UVT AC380V
U4	UVT AC440V
U5	UVT DC24V
U6	UVT DC110V

※ 1] Default for whole range
- For the applicable accessory to each breaker, please refer to page 162-163.
- For "P" type plug-in mounting, internal accessory shall be ordered.
- Internal accessory can be ordered separately.
For details, please refer to page 192-193.

Code	Frequency
C	50/60Hz

Code	Rated current
002.5	2.5A
⋮	⋮
00225	225A

※ For the applicable rated current to each breaker, please refer to page 12-24.

◆ Q-class (for nuclear power plant application) / HBL type

HBL203UMQ | **3P** | **T4** | **S** | **00** | **00** | **C** | **00225**

Type	Code
HBL	HBL103U
	HBL103UQ
	HBL103UM
	HBL103UMQ
	HBL203U
	HBL203UQ
	HBL203UM
	HBL203UMQ

※ For the applicable breaker, please refer to page 12-24.

Code	Pole
3P	3 pole

Code	Compensating temperature & trip mechanism
T4[1]	40/45°C
T5[1]	50°C
MP[2]	Adjustable instantaneous only

※ 1) Compensating temperature is applicable to fixed thermal & fixed instantaneous type; HBL103U, HBL103UQ, HBL203U, HBL203UQ
2) Adjustable instantaneous only trip mechanism is applicable to motor protection type; HBL103UM, HBL103UMQ, HBL203UM, HBL203UMQ

Code	Terminal connection
Direct mounting	
S	Screw

※ Bus bar [TBB] can be ordered separately. For details, please refer to page 215.

Code	Internal accessory
00[1]	without
Auxiliary switch (AUX)	
10	AUX 1C
20	AUX 2C
Trip alarm switch (ALT)	
01	ALT 1C
Auxiliary switch (AUX) & Trip alarm switch (ALT)	
11	AUX 1C & ALT 1C
21	AUX 2C & ALT 1C

※ 1) Default for whole range
- For the applicable accessory to each breaker, please refer to page 168-175.
- Internal accessory can be ordered separately. For details, please refer to page 192-193.

Code	Internal accessory
00[1]	without
Shunt trip (SHT)	
S1	SHT AC110V
S2	SHT AC220V
S3	SHT AC380V
S4	SHT AC440V
S5	SHT DC24V
S6	SHT DC110V
Under voltage trip (UVT)	
U1	UVT AC110V
U2	UVT AC220V
U3	UVT AC380V
U4	UVT AC440V
U5	UVT DC24V
U6	UVT DC110V

※ 1) Default for whole range
- For the applicable accessory to each breaker, please refer to page 168-175.
- Internal accessory can be ordered separately. For details, please refer to page 192-193.

Code	Frequency
C	50/60Hz

Code	Rated current
002.5	2.5A
⋮	⋮
00225	225A

※ For the applicable rated current to each breaker, please refer to page 12-24.

Order Information

◆ Switch disconnector / UAD, UCD, UPD type

UPD630S **3P** **DS** **S** **00** **00** **C** **00630**

Type	Code
UAD	UAD50C
	UAD50S
	UAD100R
UCD	UCD50H
	UCC100S
	UCD100H
	UCD160H
	UCD250S
	UCD250H
	UCD400S
	UCD630S
	UCD800S
	UCD1000S
	UCD1250S
UPD	UPD100S
	UPD160S
	UPD250S
	UPD400S
	UPD630S

※ For the applicable breaker, please refer to page 14-29.

Code	Pole
3P	3 pole

Code	Protection characteristic
DS	Switch disconnector

Code	Terminal connection
Direct mounting	
S[1]	Screw
B[2]	Bus bar
Plug-in mounting[3]	
X[4]	for both line & load side without accessories
P[5]	for both line & load side with accessories and connection block
F[6]	for line side only

※ 1] "S" (screw terminal connection) is default for UAD, UCB50-800 & UPD.
2] "B" (bus bar terminal connection) is default for UCD1000 & UCD1250.
- "B" (bus bar terminal connection) is available for 250AF and above breaker.
- Bus bar [TBB] can be ordered separately. For details, please refer to page 215.
3] Plug-in mounting is available for 3 pole breaker only.
- Mounting base [TDM] and components for plug-in mounting shall be ordered separately. For details, please refer to page 209.
4] - "X" is recommended when the internal signal accessory does not need to be wired through the mounting base.
- "X0000" code is only applicable when the accessories are not mounted.
5] - "P" is recommended when the internal signal accessory shall be plug-in also. Internal signal accessory shall be ordered along with breaker for wiring before ex-work.
- "P0000" code is not applicable. "P" code is only applicable when the accessories are mounted.
- We do not provide connection block seperately.
6] "F" (plug-in mounting for line side only) is recommended when the screw terminal connection is required at load side.

Code	Internal accessory
00[1]	without
Auxiliary switch (AUX)	
10	AUX 1C
20	AUX 2C
Trip alarm switch (ALT)	
01	ALT 1C
Auxiliary switch (AUX) & Trip alarm switch (ALT)	
11	AUX 1C & ALT 1C
21	AUX 2C & ALT 1C

1] Default for whole range
- For the applicable accessory to each breaker, please refer to page 136-165.
- For "P" type plug-in mounting, internal accessory shall be ordered.
- Internal accessory can be ordered separately.
For details, please refer to page 192-193.

Code	Internal accessory
00[1]	without
Shunt trip (SHT)	
S1	SHT AC110V
S2	SHT AC220V
S3	SHT AC380V
S4	SHT AC440V
S5	SHT DC24V
S6	SHT DC110V
Under voltage trip (UVT)	
U1	UVT AC110V
U2	UVT AC220V
U3	UVT AC380V
U4	UVT AC440V
U5	UVT DC24V
U6	UVT DC110V

※ 1] Default for whole range
- For the applicable accessory to each breaker, please refer to page 136-165.
- For "P" type plug-in mounting, internal accessory shall be ordered.
- Internal accessory can be ordered separately.
For details, please refer to page 192-193.

Code	Frequency
C	50/60Hz

Code	Rated current
00050	50A
⋮	⋮
01250	1250A

※ For the applicable rated current to each breaker, please refer to page 14-29.

◆ Miniature type - Molded case circuit breaker / UMB, UDB type

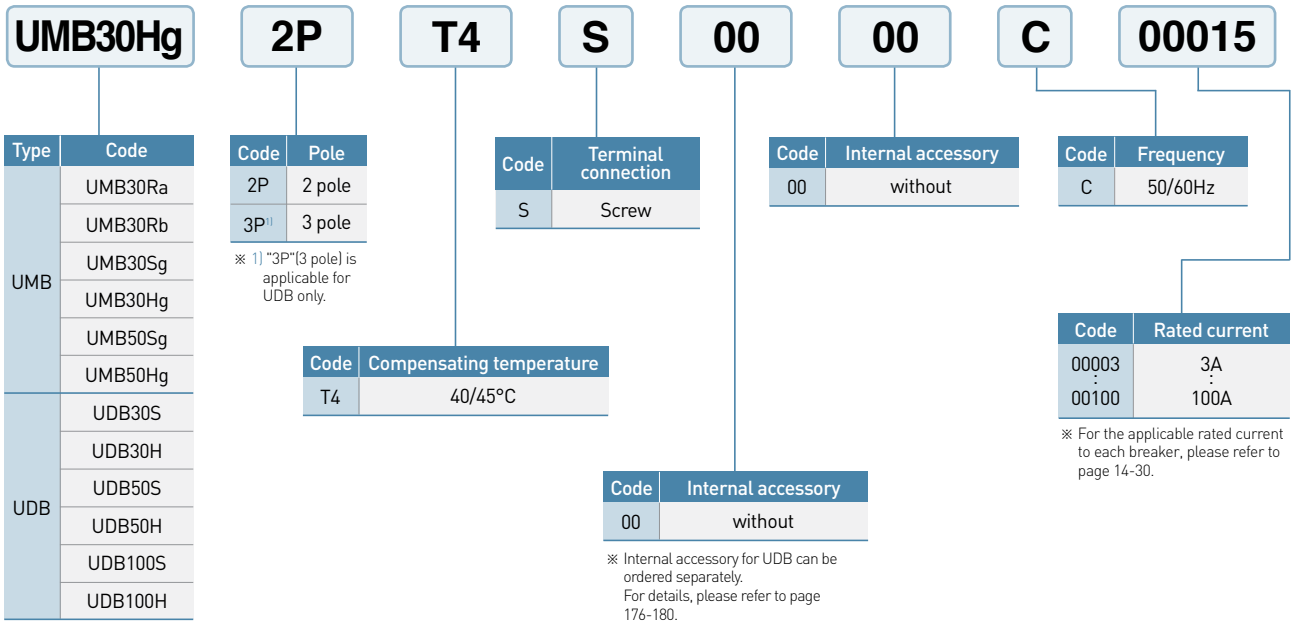

Type	Code
UMB	UMB30Ra
	UMB30Rb
	UMB30Sg
	UMB30Hg
	UMB50Sg
	UMB50Hg
UDB	UDB30S
	UDB30H
	UDB50S
	UDB50H
	UDB100S
	UDB100H

※ For the applicable breaker, please refer to page 14-30.

Code	Pole
2P	2 pole
3P[1]	3 pole

※ 1] "3P"(3 pole) is applicable for UDB only.

Code	Compensating temperature
T4	40/45°C

Code	Terminal connection
S	Screw

Code	Internal accessory
00	without

※ Internal accessory for UDB can be ordered separately.
For details, please refer to page 176-180.

Code	Internal accessory
00	without

Code	Frequency
C	50/60Hz

Code	Rated current
00003	3A
⋮	⋮
00100	100A

※ For the applicable rated current to each breaker, please refer to page 14-30.

◆ Miniature type - Earth leakage circuit breaker / UMG, UDG type

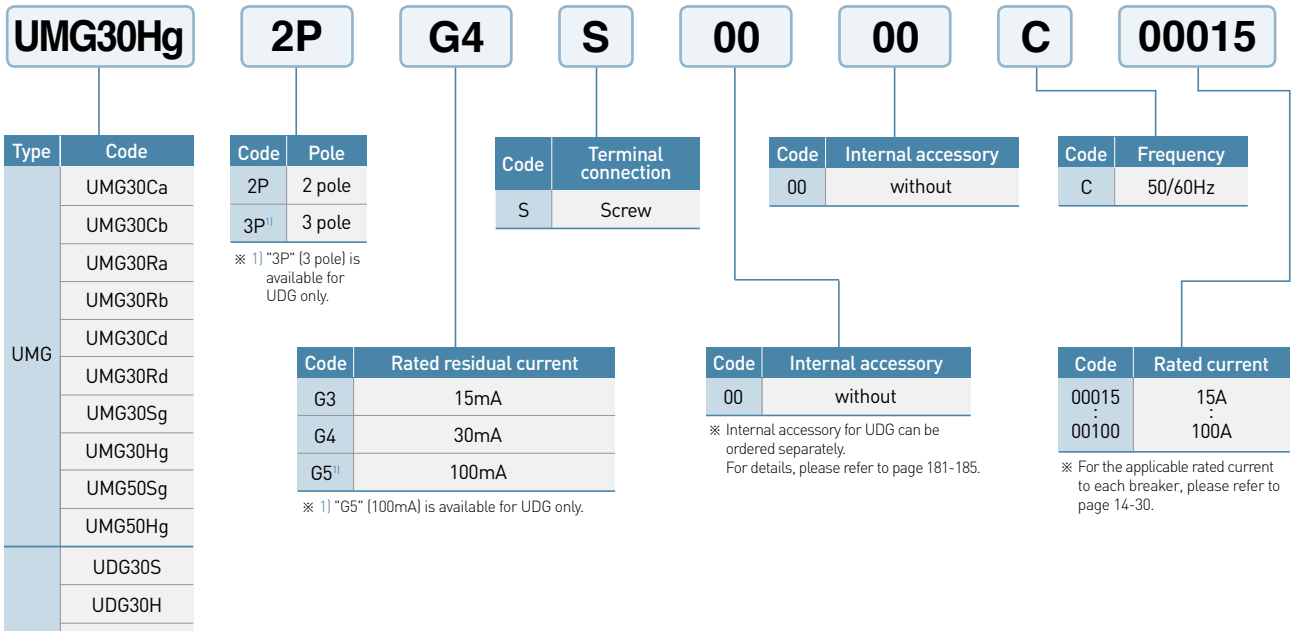

Type	Code
UMG	UMG30Ca
	UMG30Cb
	UMG30Ra
	UMG30Rb
	UMG30Cd
	UMG30Rd
	UMG30Sg
	UMG30Hg
	UMG50Sg
	UMG50Hg
UDG	UDG30S
	UDG30H
	UDG50S
	UDG50H
	UDG100H

※ For the applicable breaker, please refer to page 14-31.

Code	Pole
2P	2 pole
3P[1]	3 pole

※ 1] "3P" (3 pole) is available for UDG only.

Code	Rated residual current
G3	15mA
G4	30mA
G5[1]	100mA

※ 1] "G5" (100mA) is available for UDG only.

Code	Terminal connection
S	Screw

Code	Internal accessory
00	without

※ Internal accessory for UDG can be ordered separately.
For details, please refer to page 181-185.

Code	Internal accessory
00	without

Code	Frequency
C	50/60Hz

Code	Rated current
00015	15A
⋮	⋮
00100	100A

※ For the applicable rated current to each breaker, please refer to page 14-30.

Order Information

◆ Fixed instantaneous only / UCB type

UCB100L	3P	T4	S	00	00	C	00015	B

Type	Code
UCB	UCB50R : UCB800L

※ For the applicable breaker, please refer to page 12-20.

Code	Pole
3P	3 pole

Code	Trip mechanism
MO	Magnetic only

Code	Terminal connection
Direct mounting	
S[1]	Screw
B[2]	Bus bar
Plug-in mounting[3]	
X[4]	for both line & load side without accessories
P[5]	for both line & load side with accessories and connection block
F[6]	for line side only

※ 1) "S" (screw terminal connection) is default for whole range.
2) "B" (bus bar terminal connection) is available for 250AF and above breaker.
- Bus bar [TBB] can be ordered separately. For details, please refer to page 215.
3) Plug-in mounting is available for 3 pole breaker only.
- Mounting base [TDM] and components for plug-in mounting shall be rdered separately.
For details, please refer to page 209.
4) - "X" is recommended when the internal signal accessory does not need to be wired through the mounting base.
- "X0000" code is only applicable when the accessories are not mounted.
5) - "P" is recommended when the internal signal accessory shall be plug-in also. Internal signal accessory shall be ordered along with breaker for wiring before ex-work.
- "P0000" code is not applicable. "P" code is only applicable when the accessories are mounted.
- We do not provide connection block seperately.
6) "F" (plug-in mounting for line side only) is recommended when the screw terminal connection is required at load side.

Code	Internal accessory
00[1]	without
Shunt trip (SHT)	
S1	SHT AC110V
S2	SHT AC220V
S3	SHT AC380V
S4	SHT AC440V
S5	SHT DC24V
S6	SHT DC110V
Under voltage trip (UVT)	
U1	UVT AC110V
U2	UVT AC220V
U3	UVT AC380V
U4	UVT AC440V
U5	UVT DC24V
U6	UVT DC110V

※ 1) Default for whole range
- For the applicable accessory to each breaker, please refer to page 140-153.
- For "P" type plug-in mounting, internal accessory shall be ordered.
- Internal accessory can be ordered separately.
For details, please refer to page 192-193.

Code	Internal accessory
00[1]	without
Auxiliary switch (AUX)	
10	AUX 1C
20	AUX 2C
Trip alarm switch (ALT)	
01	ALT 1C
Auxiliary switch (AUX) & Trip alarm switch (ALT)	
11	AUX 1C & ALT 1C
21	AUX 2C & ALT 1C

※ 1) Default for whole range
- For the applicable accessory to each breaker, please refer to page 140-153.
- For "P" type plug-in mounting, internal accessory shall be ordered.
- Internal accessory can be ordered separately.
For details, please refer to page 192-193.

Code	Rated current
00003 : 00800	3A : 800A

※ For the applicable rated current to each breaker, please refer to page 12-20.

Code	Frequency
C	50/60Hz

Code	Instantaneous characteristic
B	10 x In
C	12 x In
D	15 x In

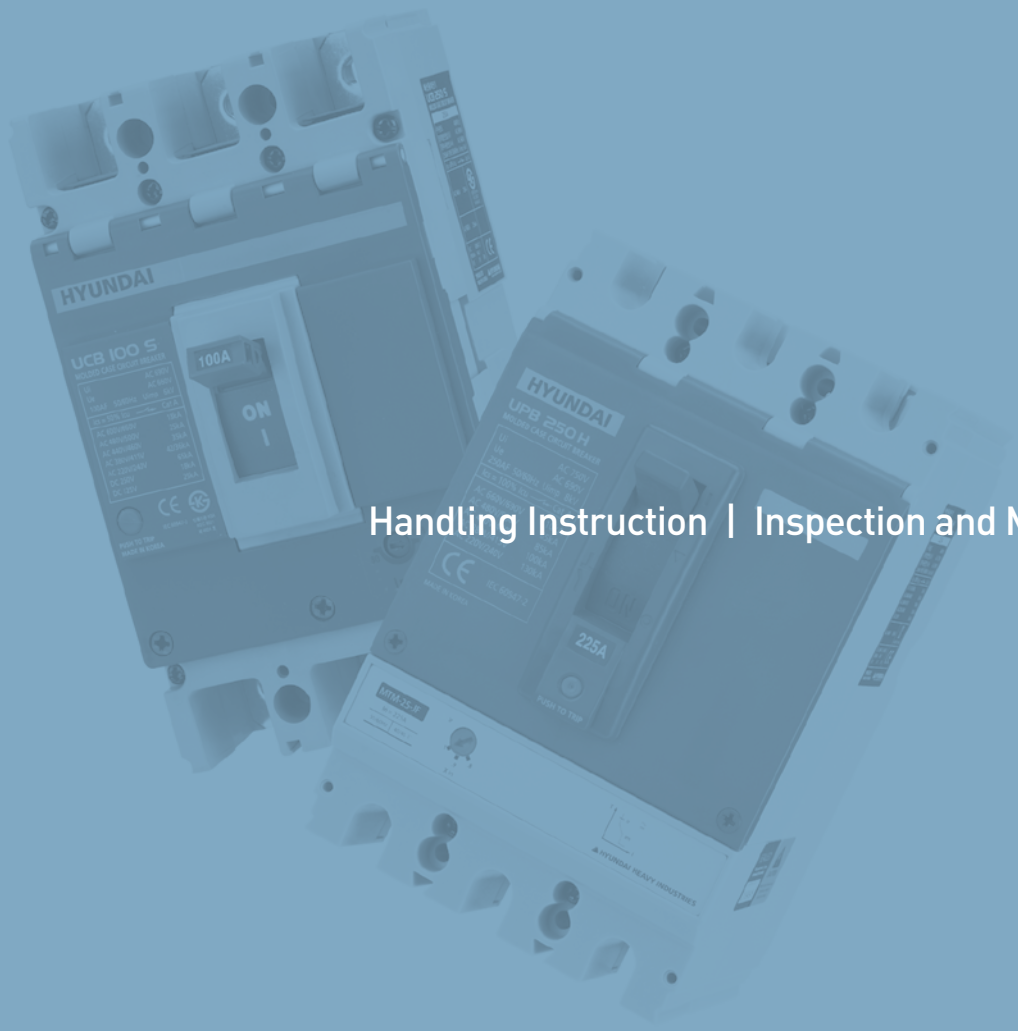

Handling Instruction | Inspection and Maintenance

Handling Instruction

| Storage |

- Do not expose to corrosive gases.
- Do not expose to harmful gases including sulfur, ammonia and so on.
- Do not expose to high humidity for a long period.
- Do not expose to direct sunlight for a long period.
- Store at -20℃ to +60℃ without dust and humidity.
- Keep the handle in OFF position.

| Transportation |

- Do not drop or apply shock during transportation. These can cause malfunctions in the breaker.

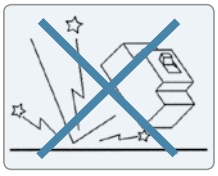

- Hold the breaker body for transportation. Do not hold terminal bus bar or external lead cable of accessories.

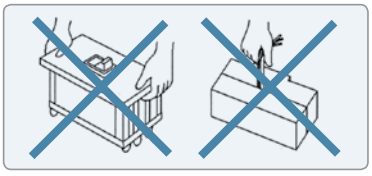

| Standard operating condition for normal performance |

Ambient temperature	-5℃ - +40℃, the average temperature for 24 hours shall not exceed 35℃
Relative humidity	45 - 85%
Vibration & shock	without excessive vibration and shock
Altitude	up to 2,000m
Surrounding	without excessive water vapor, oil vapor, smoke, dust, salts and corrosive materials

| Installation and connection |

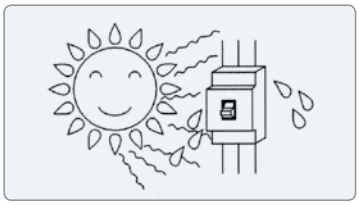

- **Keep away from direct sunlight.**
  High temperatures can cause malfunctions.

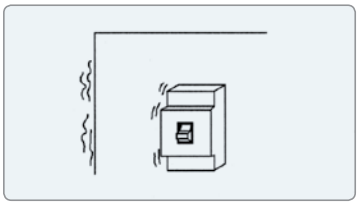

- **Avoid any vibration or shock.**
  If vibration or shock is expected, install breaker with shock absorber.

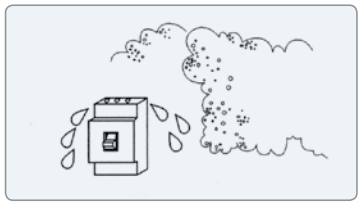

- **Keep away from dust or metal pieces.**
  When any work that accompanies dust or metal cutting is required, please cover the breaker first.

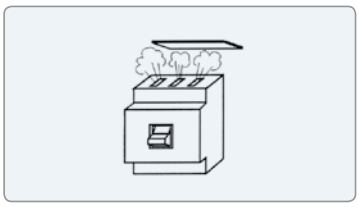

- **Do not cover the terminal part completely for arc exhaust.**
  Otherwise the breaking capacity may be decreased.

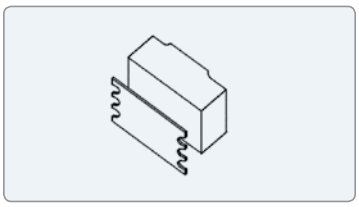

- **Do not take off the black insulation plate in back side of breaker.**
  Otherwise insulation shall be decreased or not secured.

| Installation and connection |

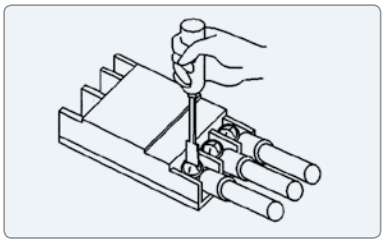

- **Tighten the terminal screws to proper torque specified in manual.**

  The loose connection may cause overheating, and excessive torque may damage screws and terminal parts.

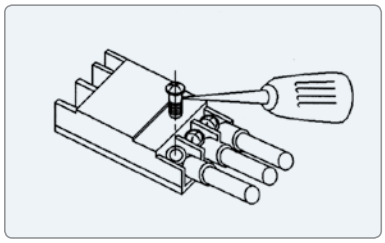

- **Do not apply lubricant on terminal parts.**

  The lubricant lets screws loose and overheating occurs.

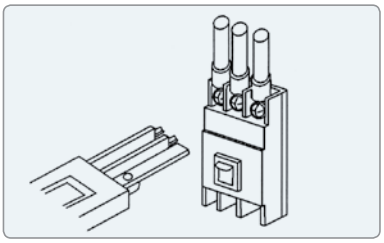

- **Insulate exposed conductors.**

  To prevent short-circuit, be sure to insulate exposed conductors by interpole barrier, terminal cover, insulating tube, insulating tape and so on.

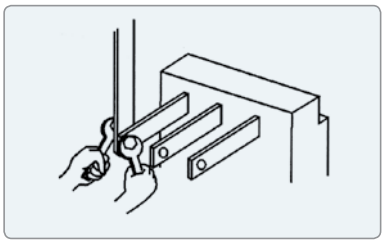

- **Do not modify the shape of studs or terminal accessories.**

  Excessive force to stud and terminal accessories should also be avoided.

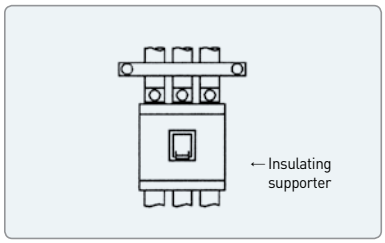

- **Fix each conductor in parallel.**

  Short-circuit current can occur electromagnetic force between conductors, so each conductor is required to fixed firmly in parallel.

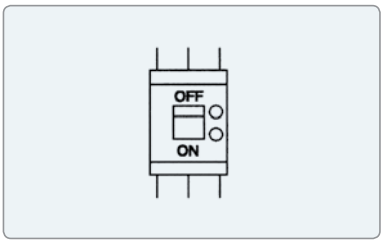

- **Reverse feeding of earth leakage circuit breaker is not allowed.**

  In case of reverse feeding, power is supplied to circuit even the breaker trips, and it shall damage trip coil.

[Electromagnetic force per 1m conductor at 3 phase short-circuit] (Unit : N [kgf])

Short -circuit current / Internal power factor (kA)	Distance between conductors	
	10cm	20cm
10/0.4	490/50	245/25
18/0.3	1863/190	932/95
25/0.2	4412/450	2206/225
35/0.23	8630/880	4315/440
42/0.2	12455/1270	6277/635
50/0.2	17652/1800	8826/900
65/0.2	29910/3050	14955/1525
85/0.2	51190/5220	25595/2510
100/0.2	70804/7220	35402/3610
125/0.2	110815/11300	55408/5650

| Connection of earth leakage circuit breaker |

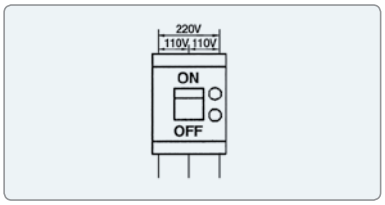

- **Single phase three line circuit**

  Power line shall be connected to both side poles of breaker, and neutral line to middle pole.

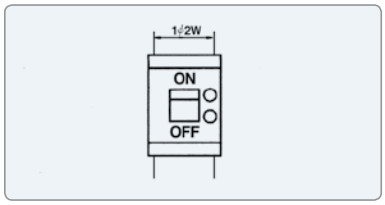

- **Single phase two line circuit**

  Circuit shall be connected to both side poles of breaker, and middle pole shall not be connected.

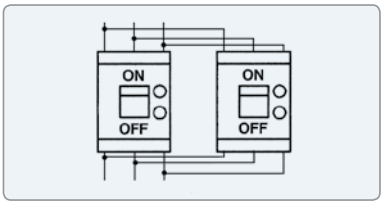

- **Parallel connection is not allowed.**

  Parallel connection causes current unbalance, malfunction and trip coil damage.

Inspection and Maintenance

| Initial inspection |

• Please check the following prior to breaker operation.

Check point
Terminal part shall be clean from dust, metal pieces and so on.
Breaker shall not have any crack or damage.
There should be non condensation on terminal parts.
Insulation resistance should be more than 5MΩ.
Terminal screws shall be tightened with specified torque.

| Dielectric test |

• The test shall be done in these conditions.

Main circuit		Secondary and control circuit	
Rated insulation voltage (Ui)	Test voltage	Rated insulation voltage (Uis)	Test voltage
Ui ≦ AC300V	AC2000V	Uis ≦ AC60V	AC1000V
AC300V < Ui ≦ AC600V	AC2500V	AC60V < Uis ≦ AC60V	2Uis + AC1000V (Max. AC1500V)

• Test for earth leakage circuit breaker

Measuring parts \ Test		Insulation resistance test		Dielectric test	
		Handle position		Handle position	
		ON	OFF	ON	OFF
Charging parts and earth		○	○	○	○
R and S phase, S and T phase		○	○	○	○
R and T phase	Line side	×	○	×	○
	Load side	×	×	×	×
Power and line side terminal		-	○	-	○

• Insulation resistance test
- Please use AC500V insulation resistance tester.
- Do not measure between R and T phase.
  The measured resistance value shall be almost 0Ω.

• Dielectric test
- Do not apply test voltage, if test voltage is applied by mistake, the breaker can not be used.

| Periodic inspection |

- In order to maintain the performance of breaker and prevent the unpredicted accident, the inspection shall be accompanied after installation and operation.
  - Once after one month of operation, thereafter as below.

Circumstance		Inspection cycle after installation
Normal	Clean air, no humidity	within 10 years : once 2-3 year more than 10 years : once a year more than 15 years : once 6 month
	Dust but no corrosive gas	within 10 years : once a year more than 10 years : once 6 month more than 15 years : once a month
Bad	Sulfurous gas, salinity, vapor	within 5 years : once 6 year more than 5 years : once a month
	Excessive corrosive gas	once a month

| Inspection and processing after breaking of fault current |

- If there is no pollution in arc exhaust parts and no other abnormality, the breaker can be re-used.
- When carbonizing symptom is found around arc exhaust parts, please measure insulation resistance. If the resistance value is more than 5MΩ, no dielectric breakdown at withstand test voltage and no excessive temperature rise of terminal parts, then the breaker can be re-used.
- If the handle part is carbonized or there is metallic melting in internal of breaker, please replace it with a new one.

Inspection and Maintenance

| Troubleshooting |

- In case of any abnormality during breaker operation, please handle it as below.
- For cases not mentioned in below, please contact us.

Molded case circuit breaker

Symptom and possible cause			Troubleshooting
Overheating	• High temperature of terminal part • Damage in insulation part of terminal	• Loose connection between terminal and conductor	• Tighten screws with specified torque
		• Heating by resistance increase of conductor	• Replace with a new breaker
		• Heating from connection part between terminal bus bar and breaker	• Tighten screws with specified torque
	• High temperature of breaker body	• Heating by resistance increase of conductor • Loose internal assembly screws • Increase of current density from cable disconnection	• Replace with a new breaker
Inferior dielectric	• Abnormal voltage of load side	• Excessive contact abrasion • Foreign substances on contact • Corrosion of conductor by excessive ON-OFF or corrosive gas	• Replace with a new breaker
Inability of operation	• Inability of ON and RESET	• Inability of reset after trip	• OFF the breaker after manual reset
		• Non-energized UVT	• Apply the power
		• Insufficient cooling of trip unit	• Reset the breaker after cooling down
		• Corrosion, damage or deformation of bimetal • Abnormality or damage in mechanism • Exhaustion of durability • Contact melting by excessive high breaking current	• Replace with a new breaker
Frequent trip	• Trip at under rated current	• High ambient temperature	• Cool down ambient temperature by ventilation or others
		• Heating by loose terminal screw connection	• Tighten screws with specified torque
		• Heating from inside of breaker	• Replace with a new breaker
		• Smaller connection conductor than specified size	• Use the specified size of conductor or adjust the rated current
	• Trip at operational current	• Trip at start-up inrush current • Trip at change-over in star-delta operation • Instantaneous trip at reverse feeding	• Adjust the instantaneous trip setting or replace with a higher current breaker
		• Instantaneous trip at high start-up inrush current • Instantaneous trip at long start-up inrush current	• Replace with a higher current breaker
		• Short-circuit between motors • Misconnection of SHT, UVT control circuit	• Repair or replace motors • Inspect circuit wiring
Malfunction	• Non trip at the current higher than specified	• Current breaking by line side fuse or low coordination with primary breaker	• Redesign the coordination between equipment
		• Extremely low ambient temperature	• Adjust the current according to temperature derating curve
		• Out of rated frequency	• Apply the rated frequency or adjust breaker frequency knob

Earth leakage circuit breaker

Symptom and possible cause			Troubleshooting
Malfunction	• Earth leakage test button is projected as soon as the breaker is ON	• Earth leakage current higher than trip current since increase of earth interruption capacity depending on wire length	• Adjust the residual current • Install the breaker closer to the load
		• Parallel connection • Mis-connection or disconnection of neutral line	• Inspect the connection and wiring
	• Trip during normal operation	• Excessive surge • Induction noise by high current generating line • Noise of electromagnetic waves	• Remove or keep away from causes

Accessories

Symptom and possible cause			Troubleshooting
Inability of operation or malfunction	• Shunt trip (SHT)	• Voltage drop of control circuit	• Adjust voltage to rated level
		• Coil damage by different voltage and malfunction of coil protection limit switch	• Replace with a new breaker
	• Under voltage trip (UVT)	• Inferior mechanism	• Replace with a new breaker
		• Different rated operational voltage	• Apply the rated voltage to UVT
	• Auxiliary switch (AUX) and trip alarm switch (ALT)	• Damage in contact or contact operation at the current higher than rated current	• Repair or replace with a new breaker
		• Inferior mechanism	• Replace with a new breaker

HHIS-WC-LE-B56-03, 2013.12 Designed by JC Creative



www.hyundai-elec.com

We build a better future
HYUNDAI HEAVY INDUSTRIES CO.,LTD.

ELECTRO ELECTRIC SYSTEMS

Head Office	1000, Bangeojinsunhwan-doro Dong-gu, Ulsan, Korea Tel: 82-52-202-8101~8	Fax: 82-52-202-8100
Seoul (Sales & Marketing)	75, Yulgok-ro, Jongno-gu, Seoul, Korea Tel: 82-2-746-8519, 7620, 7492	Fax: 82-2-746-7441
Atlanta	6100 Atlantic Boulevard, Norcross, GA 30071, USA Tel: 1-678-823-7839	Fax: 1-678-823-7553
London	2nd Floor, The Triangle, 5-17 Hammersmith Grove London, W6 0LG, UK Tel: 44-20-8741-0501	Fax: 44-20-8741-5620
Moscow	World Trade Center, Ent. 3# 703, Krasnopresnenskaya Nab. 12, Moscow, 123610, Russia Tel: 7-495-258-1381	Fax: 7-495-258-1382
Madrid	Paseo De La Castellana 216, Planta 0, 28046 Madrid, Spain Tel: 34-91-732-0454, 733-6069	Fax: 34-91-733-2389
Tokyo	8th Floor, North Tower Yurakucho Denki Bldg., 1-7-1 Yuraku-cho, Chiyoda-ku, Tokyo 100-0006, Japan Tel: 81-3-3211-4792	Fax: 81-3-3216-0728
Osaka	I-Room 5th Floor Nagahori Plaza Bldg. 2-4-8 Minami Senba, Chuo-ku, Osaka, 542-0081, Japan Tel: 81-6-6261-5766~7	Fax: 81-6-6261-5818
Mumbai	5th Floor, East Quadrant, The IL & FS Financial Centre, Plot No. C-22, G-Block, Bandra-kurla Complex, Bandra(E), Mumbai 400 051, India Tel: 91-22-2653-3420~26	Fax: 91-22-2653-3429
Riyadh	Office No. 230, 2nd Floor, 4th Akariya Plaza Olaya Street, PO Box 8072, Riyadh 11485, Saudi Arabia Tel: 966-1-464-4696	Fax: 966-1-462-2352
Dubai	Unit 205, Building 4, Emaar Square, Sheikh Zayed Road, Pobox 252458, Dubai, UAE Tel: 971-4-425-7995	Fax: 971-4-425-7996
Kuwait	15th Floor, Al-Sour Tower, Al Sour Street, Al-Qiblah, Kuwait Tel: 965-2291-5354	Fax: 965-2291-5355
Sofia	1271 Sofia 41, Rojen Blvd., Bulgaria Tel: 359-2-803-3200, 3220	Fax: 359-2-803-3203
Alabama	215 Folmar Parkway, Montgomery, AL 36105, USA Tel: 1-334-481-2000	Fax: 1-334-481-2098
Vladivostok	15 str. Potemkina, Artem, Primorskiy Krai, 692760, Russia Tel: 7-423-201-0110	Fax: 7-423-201-0110
Yangzhong	No.9 Xiandai Road, Xinba Scientific and Technologic Zone, Yangzhong, Jiangsu, P.R.C. Zip: 212212, China Tel: 86-511-8842-0666, 0212	Fax: 86-511-8842-0668, 0231