M-Seal HS

XLPE Termination

3M

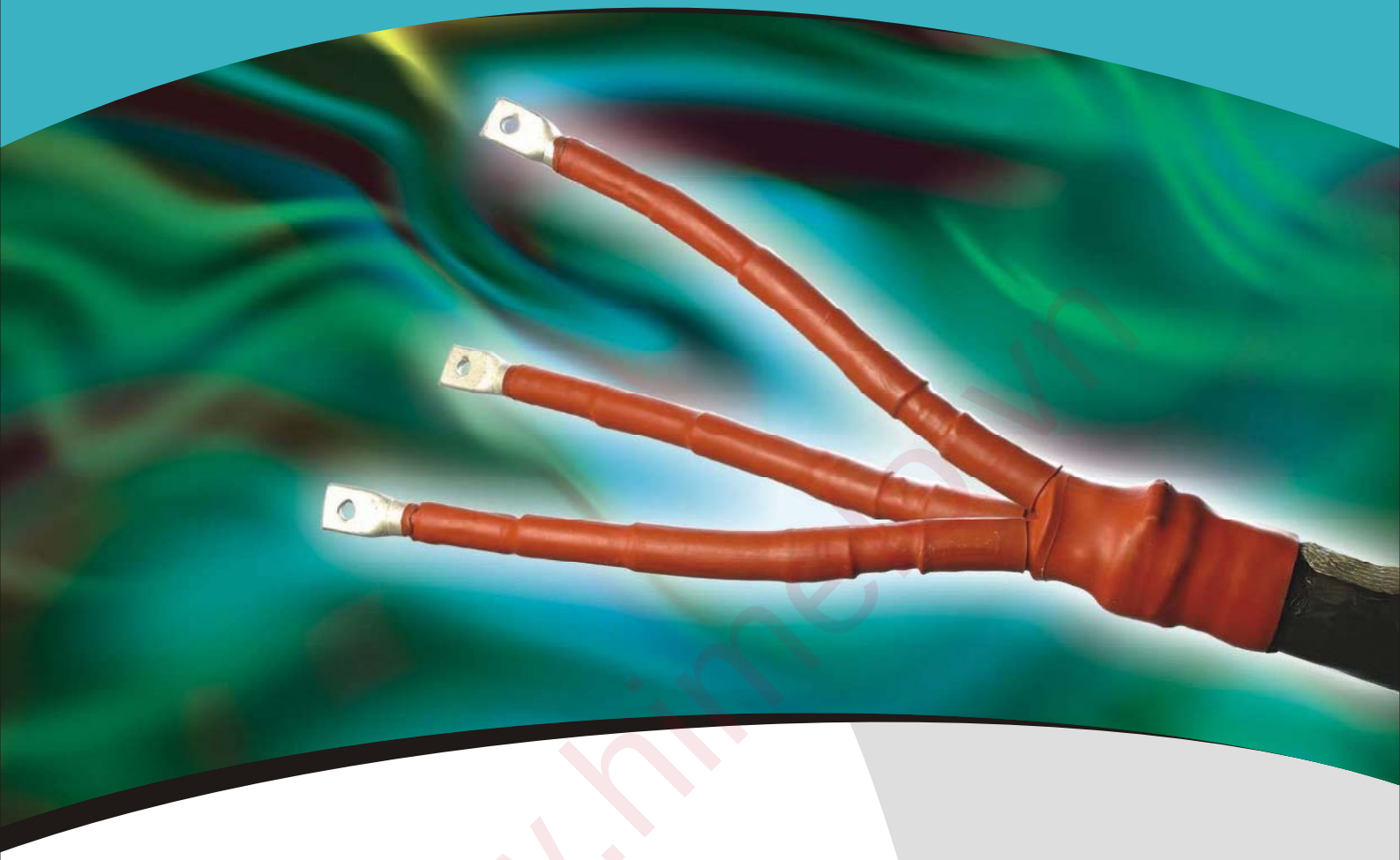

M-Seal heat shrink (HS) Terminations up to 36kV, are specially designed for conditions where the terminations are exposed to precipitation, outdoor sunlight, extreme climatic variances and heavily polluted areas. The specially engineered kits also take care of the typical partial discharge and surface corona phenomenon for all power cables under challenging service conditions.

All components required for the termination are included in a single kit, which has a prolonged storage life under normal storage conditions. A few sizes of the kits cover the entire range of cables, helping in reducing inventories. The heat shrinkable components are light in weight and are made of a specially formulated cross-linked polymeric material with excellent tracking and erosion resistance characteristics. A proper creepage path is obtained within a short overall length of the termination. The kits have been designed to meet various international standards like IS, HDE, IEEE, IEC and BS. Our state-of-the-art manufacturing facility and in-house testing laboratories and accreditation to the ISO 9001 quality assurance standard, guarantees the performance of our materials to suit customer requirements.

M-Seal HS terminations are available for both indoor and out door applications. The terminations are available for single and multi core cable types and arieal bunch cables.

Indoor Terminations: Components are designed to withstand high humidity and surface contamination under electrical stress caused due to condensation and dust in internal conditions. M-Seal HS indoor terminations are very slim and compact.

Outdoor Terminations: Components are designed to withstand exposure to UV radiation, extreme climatic variations and surface contamination under electrical stress caused due to condensation, pollution and dust in external conditions.

- Ease of installation
- Simplified cable preparation
- Outstanding long term reliability
- Effective and reliable stress control
- Excellent mechanical, thermal and electrical characteristics
- Excellent Antitracking outer surface
- Superior resistance to weathering and UV
- Resistant to water and corrosion
- Immediate energisation of cable on completion
- Suitable for all conductor shapes and materials

www.himenp.vn

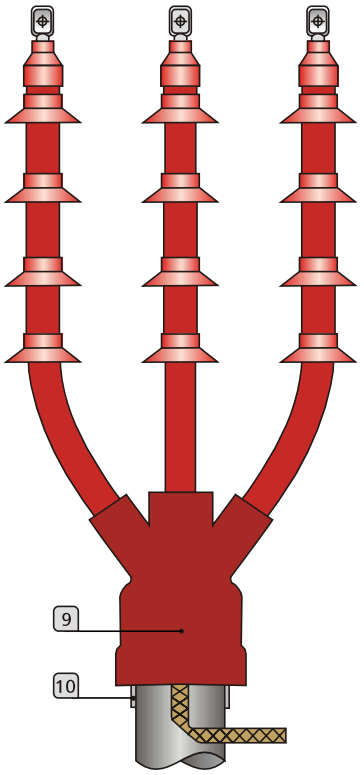

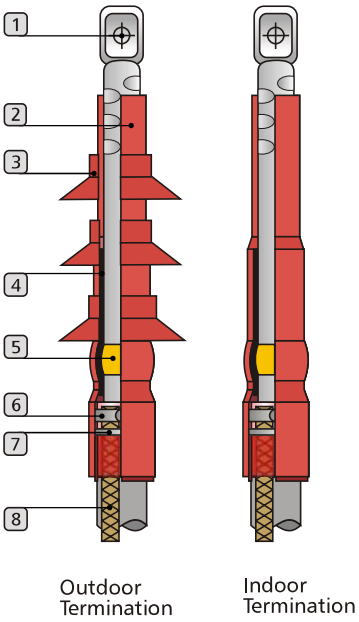

XLPE Termination

1 Terminal Connector
2 Anti-Tracking Sleeve
3 Rain Shed
4 Stress Control Sleeve
5 Stress Control Mastic
6 Binding wire
7 Worm Drive Clamp
8 Copper Braid (Earthing for Screen)
9 Breakout (with sealant layer)
10 Gland Sleeve (Adhesive Lined)

Number of Rain Sheds per phase

Voltage	Indoor	Outdoor
Upto 17.5kV	–	2
Upto 24kV	–	3
Upto 36kV	1	4

Minimum performance of M-SEAL Indoor and Outdoor Terminations *for MULTI-CORE XLPE cables upto 36kV*

Test	Parameters	Test Voltage in kV			Observations	
		12kV	24kV	36kV	Indoor	Outdoor
IAC High voltage test	5 Minutes	27	57	91	No breakdown or flashover	do
Partial discharge	Test voltage		at 2Uo		Less than 20 Pc	do
Impulse withstand test	10 +VE & 10-VE, 1.2 Micro Second between conductor & screen grounded	75	125	170	No breakdown or flashover	do
Load cycling test	126 Cycles,5H Heating. 3H Cooling with Cond.Temp. as per cable specification		at 2.5Uo		No breakdown or flashover	do
Thermal short circuit test	Current according to the cross-section of cable		-----		No visible signs of damage	do
DC withstand test	30 Minutes	48	96	144	No breakdown or flashover	do
Dynamic short circuit test	Current according to the cross-section of cable		-----		No breakdown or flashover	do
Influence of humidity	100 hours	7	14	21	No traces of erosions extending upto insulation	NA
Salt fog test	1000 hours	7	14	21	NA	No traces of erosions extending upto insulation
Wet power frequency test	1 Minute	28	50	70	NA	No breakdown or flashover

Important Notice
Before using this product, you must evaluate it and determine if it is suitable for your intended application. You assume all risks and liability associated with such use.

Warranty; Limited Remedy; Limited Liability.
This product will be free from defects in material and manufacture at the time of purchase. **3M MAKES NO OTHER WARRANTIES INCLUDING, BUT NOT LIMITED TO, ANY IMPLIED WARRANTY OF MERCHANTABILITY OR FITNESS FOR A PARTICULAR PURPOSE.** If this product is defective within the warranty period stated above, your exclusive remedy shall be, at 3M's option, to replace or repair the 3M product or refund the purchase price of the 3M product. **Except where prohibited by law, 3M will not be liable for any indirect, special, incidental or consequential loss or damage arising from this 3M product, regardless of the legal theory asserted.**

3M
Electrical Markets Division
Concorde Block, UB City,
24, Vittal Mallya Road,
Bangalore - 560 001.
Ph: 080 - 2223 1414
Fax: 080 - 22232373

Website :
www.3m.com/electrical
www.3m.com/in

www.hiteh.vn